INSTALLATION AND CONFIGURATION MANUAL

DIO48

8 CHANNEL DIGITAL AUDIO SAMPLE RATE CONVERTER / TRACKING DELAY ADD-ON CARD

SYNAPSE

Copyright

Disclaimer

The information in this manual is furnished for informational use only and subject to change without notice. While every effort has been made to ensure that the information contained in this user manual is accurate, up-to-date and reliable, EVS Broadcast Equipment cannot be held responsible for inaccuracies or errors that may appear in this publication.

Improvement Requests

Your comments will help us improve the quality of the user documentation. Do not hesitate to send improvement requests, or report any error or inaccuracy on this user manual by e-mail to doc@evs.com.

Regional Contacts

The address and phone number of the EVS headquarters are usually mentioned in the **Help > About** menu in the user interface.

You will find the full list of addresses and phone numbers of local offices either at the end of this user manual (for manuals on hardware products) or on the EVS website on the following page: http://www.evs.com/contacts.

User Manuals on EVS Website

The latest version of Media Infrastructure manuals are available at: https://mi-sftp.evs.com/
The user manuals for other EVS products can be found at the EVS download center, on the following webpage: https://www.evs.com/en/download-area.

WARNING: TO REDUCE THE RISK OF FIRE OR ELECTRICAL SHOCK, DO NOT EXPOSE THIS APPLIANCE TO RAIN OR MOISTURE

● ALWAYS disconnect your entire system from the AC mains before cleaning any component. The product frame (SFR18 or SFR04) must be terminated with three-conductor AC mains power cord that includes an earth ground connection. To prevent shock hazard, all three connections must always be used.
● NEVER use flammable or combustible chemicals for cleaning components.
● NEVER operate this product if any cover is removed.
● NEVER wet the inside of this product with any liquid.
● NEVER pour or spill liquids directly onto this unit.
● NEVER block airflow through ventilation slots.
● NEVER bypass any fuse.
● NEVER replace any fuse with a value or type other than those specified.
● NEVER attempt to repair this product. If a problem occurs, contact your local EVS distributor.
● NEVER expose this product to extremely high or low temperatures.
● NEVER operate this product in an explosive atmosphere.

Warranty: EVS warrants their products according to the warranty policy as described in the general terms. That means that EVS Broadcast Equipment SA can only warrant the products as long as the serial numbers are not removed.

Date created: 02-01-2006
Date last revised: 15-06-2012

This product complies with the requirements of the product family standards for audio, video, audio-visual entertainment lighting control apparatus for professional use as mentioned below.

CE	EN60950	Safety
	EN55103-1: 1996	Emission
	EN55103-2: 1996	Immunity

EVS Broadcast Equipment DIO48 FC Tested To Comply With FCC Standards FOR HOME OR OFFICE USE	This device complies with part 15 of the FCC Rules Operation is subject to the following two conditions: (1) This device may cause harmful interference, and (2) This device must accept any interference received, including interference that may cause undesired operation.

Introduction to Synapse **5**
An Introduction to Synapse *5*
Local Control Panel *5*
Remote Control Capabilities *5*

Unpacking and Placement **6**
Unpacking *6*
Locating and placing the card *6*

A Quick Start **7**
When Powering-up *7*
Changing settings and parameters *7*
Front Panel Control *7*
Example of changing parameters using front panel control *8*
Synapse Setup Software *9*
Menu Structure Example *9*

The DIO48 Card **10**
Introduction *10*
Key Features *10*
Performance *11*
ADD-ON Functionality *11*
Back planes *11*
Miscellaneous *11*

Settings Menu **12**
Introduction *12*
In_Out *12*
Ref-Input *13*
SRC *13*
Tracking *14*
Channel_mode *14*
Silence-time *15*
Silence-level *15*
SourceA1 ~ SourceA4 *15*
SourceB1 ~ SourceB4 *16*
Gain-A1 *16*

Gain-A2 16
Gain-A3 17
Gain-A4 17
Gain-B1 17
Gain-B2 17
Gain-B3 17
Gain-B4 18
Phase-A1 18
Phase-A2 18
Phase-A3 18
Phase-A4 18
Phase-B1 18
Phase-B2 18
Phase-B3 18
Phase-B4 19
Sil-Det-A1 ~ 19
Sil-Det-B4 19
Out _1 19
Out _2 19
Out-_3 19
Out _4 19
Out _5 19
Out _6 19
Out_7 20
Out _8 20
Masterfade 20
Delay_AES1/2 ~ Delay_AES7/8 20

Status Menu **21**
Introduction 21
Tracking_input 21
Ref_stat 21
AES1-In 21
AES2-In 21
AES3-In 21
AES4-In 21

Audio-A1 21
Audio-A2 21
Audio-A3 22
Audio-A4 22
Audio-B1 22
Audio-B2 22
Audio-B3 22
Audio-B4 22

Events Menu **23**
Introduction 23
What is the Goal of an event? 23
DIO48 Events 23
Announcements 23
Reference 23
Audio-Data 23
What information is available in an event? 23
The Message String 24
The Tag 24
Defining Tags 24
The Priority 24
The Address 24

LED Indication **25**
Error LED 25
Input LED 25
Reference LED 25
Data Error LED 25
Connection LED 25

Block Schematic **26**

Connector Panel **27**

1 Introduction to Synapse

An Introduction to Synapse

Synapse is a modular system designed for the broadcast industry. High density, intuitive operation and high quality processing are key features of this system. Synapse offers a full range of converters and processing modules. Please visit the EVS Broadcast Equipment SA Website at http://www.evs.com to obtain the latest information on our new products and updates.

Local Control Panel

The local control panel gives access to all adjustable parameters and provides status information for any of the cards in the Synapse frame, including the Synapse rack controller. The local control panel is also used to back-up and restore card settings. Please refer to the RRC18, RRC10, RRC04, RRS18 and RRS04 manuals for a detailed description of the local control panel, the way to set-up remote control over IP and for frame related settings and status information.

Remote Control Capabilities

The remote control options are explained in the rack controller (RRC18/RRC10/RRC04/RRS18/RRS04) manual. The method of connection to a computer using Ethernet is described in the RRC/RRS manual.

! **CHECK-OUT:** "EVS CORTEX" SOFTWARE WILL INCREASE SYSTEM FLEXIBILITY OF ONE OR MORE SYNAPSE FRAMES

Although not required to use Cortex with a Synapse frame, you are strongly advised to use a remote personal computer or laptop PC with EVS Cortex installed, as this increases the ease of use and understanding of the modules.

2 Unpacking and Placement

Unpacking

The EVS Synapse card must be unpacked in an anti-static environment. Care must be taken NOT to touch components on the card – always handle the card carefully by the edges. The card must be stored and shipped in anti-static packaging. Ensuring that these precautions are followed will prevent premature failure from components mounted on the board.

Locating and placing the card

The Synapse card can be placed vertically in an SFR18 frame or horizontally in an SFR04 and SFR08 frame. Locate the two guide slots to be used, slide in the mounted circuit board, and push it firmly to locate the connectors.

Correct insertion of card is essential as a card that is not located properly may show valid indicators, but does not function correctly.

REMARK: On power up all LEDs will light for a few seconds, this is the time it takes to initialise the card.

3 A Quick Start

When Powering-up

On powering up the Synapse frame, the card set will use basic data and default initialisation settings. All LEDs will light during this process. After initialisation, several LEDs will remain lit – the exact number and configuration is dependant upon the number of inputs connected and the status of the inputs.

Changing settings and parameters

The front panel controls or the EVS Cortex can be used to change settings. An overview of the settings can be found in chapter 5, 6 and 7 of this manual.

Front Panel Control

Front Panel Display and Cursor

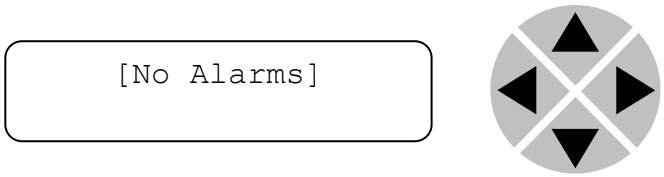

Settings are displayed and changed as follows;

Use the cursor ‘arrows’ on the front panel to select the menu and parameter to be displayed and/or changed.

Press ►	To go forward through the menu structure.
Press ◄	To go back through the menu structure.
Press ▲	To move up within a menu or increase the value of a parameter.
Press ▼	To move down through a menu or decrease the value of a parameter.

REMARK: Whilst editing a setting, pressing ► twice will reset the value to its default.

Example of changing parameters using front panel control

With the display as shown below

```
RRC18 [Select Card]
>S01=DIO48
```

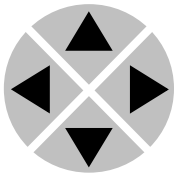

Pressing the ► selects the DIO48 in frame slot 01.

The display changes to indicate that the DIO48 has been selected. In this example the `Settings` menu item is indicated.

```
DIO48 [Select Menu]
>Settings
```

Pressing the ► selects the menu item shown, in this example `Settings`.

(Pressing ▲ or ▼ will change to a different menu eg `Status, Events)`.

The display changes to indicate that the DIO48 `Settings` menu item `SDI-Format` has been selected and shows that it current setting is `Auto`.

```
DIO48 [Settings]
>SDI-Format=Auto
```

Pressing the ► selects the settings item shown, in this example `SDI-Format`.

(Pressing ▲ or ▼ will change to a different setting, eg `Mode, H-Delay)`.

The display changes to indicate that the DIO48 `Edit Setting` menu item `SDI-Format` has been selected.

```
DIO48[Edit Setting]
SDI-Format>Auto
```

To edit the setting of the menu item press ▲ or ▼.
All menu items can be monitored and/or changed in this way.
Changing a setting has an immediate effect.

Synapse Setup Software

EVS Cortex can be used to change the settings of Synapse modules from a PC, either locally or remotely. The software enables communication based on TCP/IP between the Setup PC and Synapse frames/modules.

Each Synapse frame is addressed through its rack controller's unique IP address, giving access to each module, its menus and adjustment items. EVS Cortex has access to data contained within the Synapse module and displays it on a GUI. The software has an intuitive structure following that of the module that it is controlling.

For operation of EVS Cortex, please refer to the Cortex help files.

Menu Structure Example

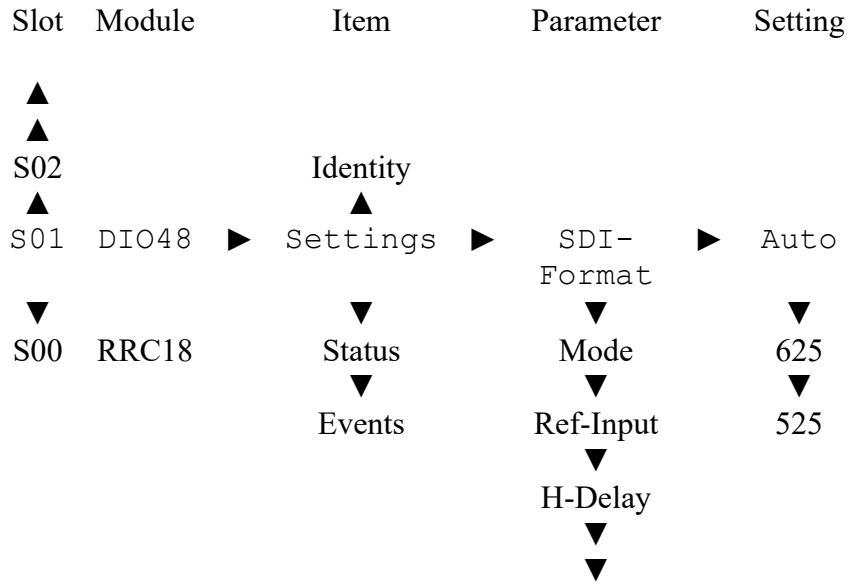

NOTE: Further information about Front Panel Control and EVS Cortex can be obtained from the RRC and RRS operational manuals and the Cortex help files.

4 The DIO48 Card

Introduction

The EVS DIO48 is a multi function product. Its basic function is the conversion of asynchronous AES/EBU digital audio into synchronous AES/EBU utilizing the on-board sample rate converter. The DIO48 has a tracking audio delay, with a delay offset possibility of up to 5200ms, and it can perform the Synapse ADD-ON function.

In ADD-ON mode the card acts as a digital audio input board that feeds a master card positioned one slot left of the ADD-ON card. For example the DIO48 acts as a digital audio embedder when used with the EVS ASV10 or SFS11.

The manipulated audio data that enters the Synapse bus to a master card is identical to the data present on the local AES/EBU outputs. The AES/EBU in and outputs are available on 75 Ohm BNC or 110 Ohm screw terminals. This choice is made with the choice of back panel. The BPL02 has 75 Ohm AES/EBU in and outputs. The BPL03 has 75 Ohm AES/EBU inputs and 110 Ohm AES/EBU outputs and the BPL04 has 110 Ohm AES/EBU in and outputs.

Or 110 Ohm on a D-sub type connector BPL05D

The user has control over channel selection/swapping, gain and phase control of all 8 audio channels.

Key Features

The Key features of the DIO48 are as follows:

- Selection of 8 channels out of all local and ADD-ON inputs
- Full mixing capabilities of 2 x 4 channels (A and B)
- AES/EBU inputs with optional SRC (32 to 192kHz sampling)
- Sample clock can be derived from MASTER card (ADD-ON mode)
- 48kHz sample clock locked to: B&B ref or wordclock ref
- 48kHz sample clock in free running mode
- Available with 110Ω (phoenix or sub-D) of 75Ω (BNC) AES/EBU in- and outputs
- Adjustable audio gain (in 0.25dB) and phase (0-180 deg)
- Can be used as a Synapse ADD-ON input or output card
- Adjustable audio delay offset up to 5200ms in 1ms increment
- Tracking audio delay on dedicated BNC input
- MASTER fade function for dedicated Synapse applications

Performance

The DIO48 has high quality sample rate converters that are capable of sampling up to 192kHz. The SRC (sample rate conversion) based digital audio inputs can handle sample rates from 32k to 192k.

ADD-ON Functionality

As described in the introduction the DIO48 can be used as an ADD -ON card for embedding digital audio. Examples of Master cards that are capable of embedding are ASV08, ASV10, ASC10, SFS11, SFS21, and the SEB20. The SEB20 is an audio embedder but can add an extra set of 8 audio channels when used with the DIO48 without the need to cascade serial digital video equipment.

In ADD-ON mode the DIO48 receives a clock from the master card. This audio clock is locked to the video on the master card. An extra VCXO based PLL removes any jitter that might be induced in the video environment.

The DIO48 also acts as a loop card for an additional ADD-ON card. The block schematic illustrates this with the colored arrows. The yellow arrow is the output of the DIO48. The red, blue and green arrows provide a loop for adjacent ADD-ON cards.

Back planes

The DIO48 can be used with the BPL01, BPL04 and BPL05D backplanes.

Miscellaneous

The DIO48 cards fit into the EVS SFR04 & SFR18 rack.

LED’s on the front of the board indicate the presence of an Audio Input signal, Connection & Processor Errors.

The DIO48 can be controlled by EVS Synapse set-up software.

5 Settings Menu

Introduction

The DIO48 is a multi-functional product. Its basic function is the conversion of asynchronous AES/EBU digital audio into synchronous AES/EBU, utilizing the on-boards sample rate converter. It can perform the Synapse ADD-ON function. The module also offers shuffling and mixing of the AES channels.

In_Out

`In_Out` determines how the synapse bus inputs and outputs work. There's 4 modes:

- `Dig-Dig:` No Synapse bus I/O.
- `Deemb-Dig:` Add-on lines 1 and 2 are both used as inputs for deembedding add-on purposes. See schematic below:

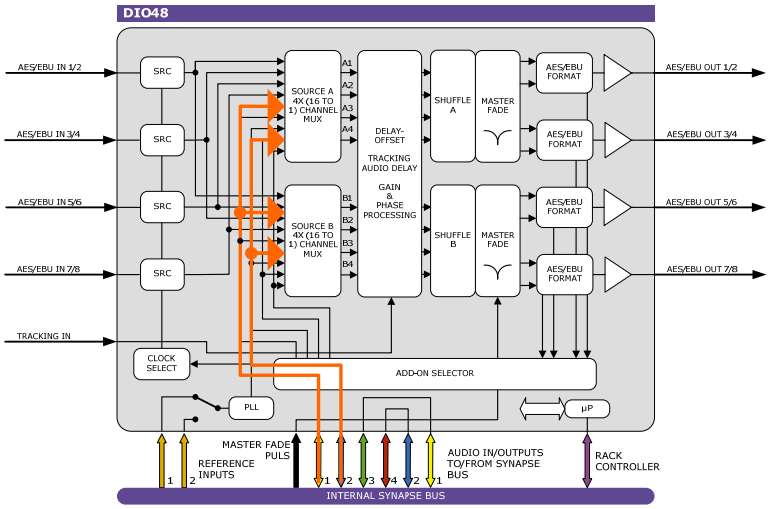

- `Dig-Emb:` Add-on lines 1 and 2 are both used as outputs for embedding add-on purposes. Line 1 coming out of source A (`SourceA1` till `SourceA4` outputs fixed onto `Add_on1` till `Add_on4`) and line 2 coming out of source B (`SourceB1` till `SourceB4` outputs fixed onto `Add_on5` till `Add_on8`). See schematic below:

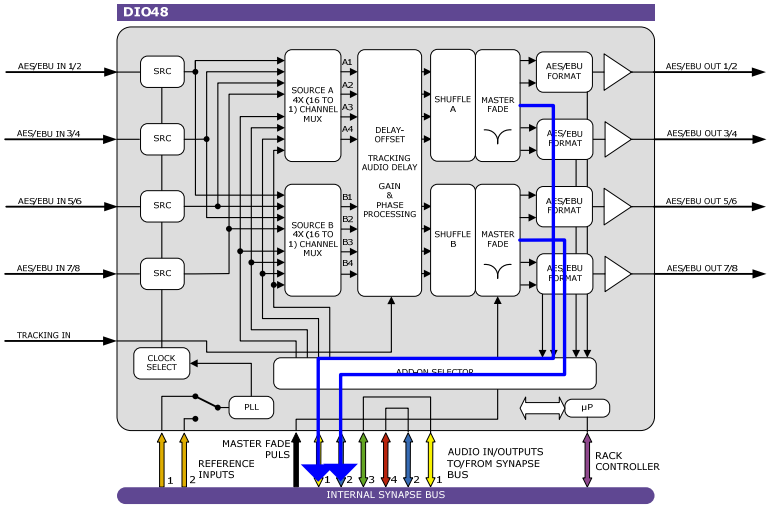

- `Deemb-emb`: Line 1 is used for input into source A and source B, line 2 is used for output out of source B only (`SourceB1` till `SourceB4` outputs fixed onto `Add_on5` till `Add_on8`). Note that in this mode, Source A and B inputs can not be set to `Add_on5` till `Add_on8`. See the schematic below for this setting's visual explanation.

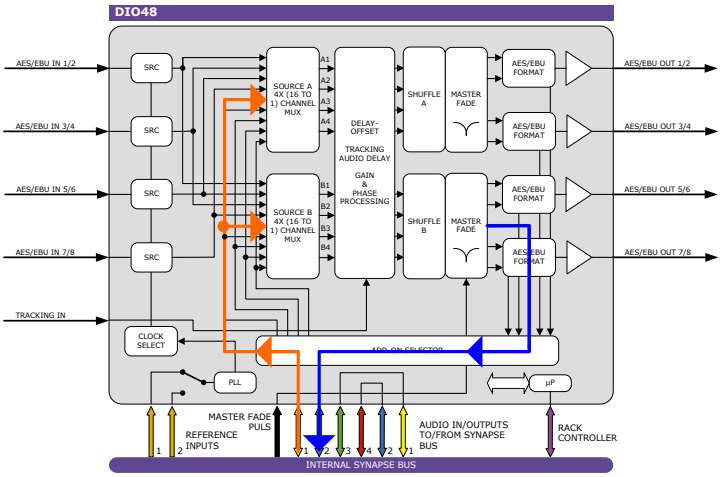

Default setting is `Dig - Dig`.

Ref-Input

The output frequency of the DIO48 can be free running from a local oscillator or locked to different sources.

The settings of `Ref-Input` are as follows;

`FREE_run` set the DIO48 in to free running mode.

`Add_on` enables the DIO48 to be locked to the master card.

`Wordclk1` and `Wordclk2` is used when a 48k wordclock is connected to the central genlock input of the SFR18/04.

`Genlock1` and `Genlock2` is used when a video Black& Burst is connected to the central genlock input of the SFR18/04.

`AES_1/2`, `AES_3/4`, `AES_5/6` and `AES_7/8` are used to lock the card to the corresponding AES input. ***Please note that this only works when the following `SRC` setting is set to `Trans`(parent)!***

The default setting of `Ref-Input` is Free_run.

SRC

The AES/EBU inputs are connected to a Sample Rate Converter. This enables the input to use audio sample rates that are non-synchronous to video. For Non PCM audio data the SRC can be bypassed and the data is inserted in the card transparently (`Trans`).

The settings of `SRC` are On and `Trans`.

The default setting is `On`.

Tracking

The DIO48 can be used as a tracking audio delay. The tracking input must be connected to a tracking output of a Frame synchronizer, for example the SFS11. The setting `Tracking` has 3 modes, they are as follows;

`Off`: No tracking. `Fast`: Fast tracking and handling of frame drops enabling instantaneous synchronization of audio.

`Smooth`: Slow correction of frame drops enabling gradual synchronization of audio.

The default setting of `Tracking` is `Off`.

Channel_mode

With this channel you select what the channel mode of the audio is. This is set in the AES/EBU's Channel Status Bits in byte 1. Can be set to `2-ch` (2 mono channels), `stereo` or `Dig - Dig` (2 digital channels). Default is `2-ch`.

AES / EBU 's Channel Status Bits:
The AES / EBU standard is composed of channel bits, each surrounded by a subframe. In each subframe there are 192 bits of a word processed in a single audio block, translated into a fraction of 192 / 8 = 24 bytes. In the first, the basic information of how most parts of the bits are used is explained. If you are wondering how the 24 bytes are described in the AES / EBU standards, below are the most common descriptions that experts use to explain the process:

- Byte 0 is often described as the most fundamental of the control data. These are available: primarily the sample rate, compression, and emphasis.
- Byte 1 specifies the type of the audio stream, whether stereo, mono, or a combination of both.
- Byte 2 for audio word length
- Byte 3 is used to treat multi-channel applications
- Byte 4 is used to evaluate the suitability of the audio signal sampling rate as a reference to describe
- Byte 5 is reserved.
- Bytes 6-9 and 10-13 represent the two slots of four bytes in the transmission of ASCII characters.
- Bytes 14 to 17 are used for the sample address 4-byte/32-bit
- Bytes 18 to 21 represent the time format.
- Byte 22 is involved in the reliability of the audio block
- Byte 23 is required for absences, resulting in an interruption of data flow

Silence-time

The DIO has a silence detection built in. With this setting you decide how long a silence should be before it is detected and alerted as a silence. Can be anywhere between 1 and 254 seconds. Default is 1 second.

Silence-level

This item decides at what volume level a silence should be detected. Can ben anywhere between -20 and -100 dBFS. Default is -40 dBFS.

Note:

- When a silence is detected (conform the above 2 setting items) it is indicated by the status items `Audio-A1` till `Audio-B4` individually. This can also be alerted using the events menu.
- Silence events are only triggered if the setting `Sil-Det-Xx` for that specific channel is set to `on`. Status items `Audio-A1` till `Audio B4` will always indicate silence detections conform these settings, despite `Sil-Det` being switched on or off.
- Silence detection is done ***after*** the input mux and ***before*** the gain and phase processing.

SourceA1 ~ SourceA4

`SourceA1` till `SourceA4` allow you to select what the source inputs should be. The possible settings differ for each mode. These are the possibilities per mode:

- `Dig-Emd` mode: the local input channels `Aes1L` till `Aes4R` are possible.
- `Dig-dig` mode: the local input channels `Aes1L` till `Aes4R` are possible.
- `Deemb-Emb` mode: the local input channels `Aes1L` till `Aes4R` and Add-on output channels `Add_on1` till **`Add_on4`** are possible.
- `Deemb-dig` mode: the local input channels `Aes1L` till `Aes4R` and Add-on outputs channels `Add_on1` till `Add_on8` are possible.

Modes are set in the setting `In_Out`. The default settings for `SourceA1` till `sourceA4` are respectively `Aes1L` till `Aes2R`

Note: in `Deemb-Emb and Deemb-dig` mode it is possible to make a selection and combine local channels with ADD_ON channels.

Note: If `Deemb-Dig` or `Deemb-emb` modes are set, `ADD_ON1` till `Add-On4` are the required settings if you want to use the card for deembedding.

SourceB1 ~ SourceB4

SourceB1 till SourceB4 allow you to select what the source inputs should be. The possible settings differ for each mode. These are the possibilities per mode:

- Dig-Emd mode: the local input channels Aes1L till Aes4R are possible.
- Dig-dig mode: the local input channels Aes1L till Aes4R are possible.
- Deemb-Emb mode: the local input channels Aes1L till Aes4R and Add-on output channels Add_on1 till **Add_on4** are possible.
- Deemb-dig mode: the local input channels Aes1L till Aes4R and Add-on outputs channels Add_on1 till Add_on8 are possible.

Modes are set in the setting In_Out. The default settings for SourceB1 till sourceB4 are respectively Aes3L till Aes4R

Note: in Deemb-Emb and Deemb-dig mode it is possible to make a selection and combine local channels with ADD_ON channels.

Note: If Deemb-Dig mode is set, ADD_ON5 till Add-On8 are the required settings if you want to use the card for deembedding.

Gain-A1

The settings menu item Gain-A1 controls the output gain of channel 1; the right channel of the first AES/EBU output. Gain-A1 has an adjustment range between -60.0dB and +12.0dB. When Gain-A1 is set to 0dB, the output level is equal to the input level.

-999 is silence.

The default setting of Gain-A1 is 0dB.

Gain-A2

The settings menu item Gain-A2 controls the output gain of channel 2; the left channel of the first AES/EBU output. Gain-A2 has an adjustment range between -60.0dB and +12.0dB. When Gain-A2 is set to 0dB, the output level is equal to the input level.
-999 is silence.

The default setting of Gain-A2 is 0dB.

Gain-A3

The settings menu item `Gain-A3` controls the output gain of channel 1; the right channel of the second AES/EBU output. `Gain-A3` has an adjustment range between `-60.0dB` and `+12.0dB`. When `Gain-A3` is set to `0dB`, the output level is equal to the input level.

-999 is silence.

The default setting of `Gain-A3` is `0dB`.

Gain-A4

The settings menu item `Gain-A4` controls the output gain of channel 2; the left channel of the second AES/EBU output. `Gain-A4` has an adjustment range between `-60.0dB` and `+12.0dB`. When `Gain-A1` is set to `0dB`, the output level is equal to the input level.

-999 is silence.

The default setting of `Gain-A4` is `0dB`.

Gain-B1

The settings menu item `Gain-B1` controls the output gain of channel 1; the right channel of the third AES/EBU output. `Gain-B1` has an adjustment range between `-60.0dB` and `+12.0dB`. When `Gain-B1` is set to `0dB`, the output level is equal to the input level.

-999 is silence.

The default setting of `Gain-B1` is `0dB`.

Gain-B2

The settings menu item `Gain-B2` controls the output gain of channel 2; the right left of the third AES/EBU output. `Gain-B2` has an adjustment range between `-60.0dB` and `+12.0dB`. When `Gain-B2` is set to `0dB`, the output level is equal to the input level.

-999 is silence.

The default setting of `Gain-B2` is `0dB`.

Gain-B3

The settings menu item `Gain-B3` controls the output gain of channel 2; the right channel of the fourth AES/EBU output. `Gain-B3` has an adjustment range between `-60.0dB` and `+12.0dB`. When `Gain-B3` is set to `0dB`, the output level is equal to the input level.

-999 is silence.

The default setting of `Gain-B3` is `0dB`.

Gain-B4

The settings menu item `Gain-B4` controls the output gain of channel 2; the LEFT channel of the fourth AES/EBU output. `Gain-A1` has an adjustment range between `-60.0dB` and `+12.0dB`. When `Gain-A1` is set to `0dB`, the output level is equal to the input level. -999 is silence.

The default setting of `Gain-A1` is `0dB`.

Phase-A1

The phase of channel A1 can be adjusted using the setting menu item `Phase-A1`. The settings of `Phase-A1` are `0 deg` (degrees) and `180 deg`. The default setting of `Phase-A1` is `0 deg`.

Phase-A2

The phase of channel A2 can be adjusted using the setting menu item `Phase-A2`. The settings of `Phase-A2` are `0 deg` (degrees) and `180 deg`. The default setting of `Phase-A2` is `0 deg`.

Phase-A3

The phase of channel A3 can be adjusted using the setting menu item `Phase-A3`. The settings of `Phase-A3` are `0 deg` (degrees) and `180 deg`. The default setting of `Phase-A3` is `0 deg`.

Phase-A4

The phase of channel A4 can be adjusted using the setting menu item `Phase-A1`. The settings of `Phase-A4` are `0 deg` (degrees) and `180 deg`. The default setting of `Phase-A4` is `0 deg`.

Phase-B1

The phase of channel B1 can be adjusted using the setting menu item `Phase-B1`. The settings of `Phase-B1` are `0 deg` (degrees) and `180 deg`. The default setting of `Phase-B1` is `0 deg`.

Phase-B2

The phase of channel B2 can be adjusted using the setting menu item `Phase-B2`. The settings of `Phase-B2` are `0 deg` (degrees) and `180 deg`. The default setting of `Phase-B2` is `0 deg`.

Phase-B3

The phase of channel B3 can be adjusted using the setting menu item `Phase-B3`. The settings of `Phase-B3` are `0 deg`

(degrees) and 180 deg. The default setting of Phase-B3 is 0 deg.

Phase-B4

The phase of channel B4 can be adjusted using the setting menu item Phase-B4. The settings of Phase-B4 are 0 deg (degrees) and 180 deg. The default setting of Phase-B4 is 0 deg.

Sil-Det-A1 ~ Sil-Det-B4

With these settings you can individually switch on or off silence events for each audio channel. To create an event for silence detection you can turn on or off every channel that is involved in the EVENT => DATA_ERR (tag 5).

Note: the status menu items Audio-A1 till Audio-B4 will always indicate silence detections, despite of the Sil-Det setting being switched off! This setting is only used for the event handlers. Default is off

Out _1

Out_1 sets the shuffle channels to output 1L. It is possible to mix a selection of all 4 A channels as set in SourceA1..SourceA4, A____ to A1234. The default setting is A-1___

Out _2

Out_2 sets the shuffle channels to output 1R. It is possible to mix a selection of all 4 A channels as set in SourceA1..SourceA4, A____ to A1234. The default setting is A-_2__

Out-_3

Out_3 sets the shuffle channels to output 2L. It is possible to mix a selection of all 4 A channels as set in SourceA1..SourceA4, A____ to A1234. The default setting is A-__3_

Out _4

Out_4 sets the shuffle channels to output 2R. It is possible to mix a selection of all 4 A channels as set in SourceA1..SourceA4, A____ to A1234. The default setting is A-___4

Out _5

Out_5 sets the shuffle channels to output 3L. It is possible to mix a selection of all 4 B channels as set in SourceB1..SourceB4, B____ to B1234. The default setting is B-1___

Out _6

Out_6 sets the shuffle channels to output 3R. It is possible to mix a selection of all 4 B channels as set in SourceB1..SourceB4, B____ to B1234. The default setting is A-_2__

Out_7

Out_7 sets the shuffle channels to output 4L. It is possible to mix a selection of all 4 channels as set in SourceB1..SourceB4, B____ to B1234. The default setting is B-__3_

Out _8

Out_8 sets the shuffle channels to output 4R. It is possible to mix a selection of all 4 channels as set in SourceB1..SourceBH4, B____ to B1234. The default setting is B-___4

Masterfade

Masterfade provides a signal prior to the event to ramp down and then ramps up the audio to mask any audio irregularities.

The settings of Masterfade are On and Off. The default setting is Off.

Delay_AES1/2 ~ Delay_AES7/8

In addition to the tracking function, the DIO48 can add an offset delay to the audio signal. This delay can be used to compensate for other static video propagation delays. Delays can be set per AES pair.

Delay per AES pair can be adjusted from 0ms to 1300ms in 1 ms increments.

Please note that you can fill out the variables in tenths, E.g. 0.85, so they do not have to be round figures.

The default setting of Delay is 0ms.

6 Status Menu

Introduction

The status menu indicates the current status of each item listed below.

Tracking_input

The status item `Tracking_input` indicates if a Tracking signal is present on BNC1.

`OK` if there is a signal

or `NA` if there is no signal.

Ref_stat

The status item `Ref_stat` indicates whether the card is locked on to the reference or the Mastercard.

`OK` when the card is locked, or `NA` when the card is not locked.

AES1-In

The status item `AES1-In` indicates the condition of the AES/EBU audio signal at the AES input 1. `AES` indicates if the input signal is `OK`, `Clipped` or `NA` (not available).

AES2-In

The status item `AES2-In` indicates the condition of the AES/EBU audio signal at the AES input 2. `AES` indicates if the input signal is `OK`, `Clipped` or `NA` (not available).

AES3-In

The status item `AES3-In` indicates the condition of the AES/EBU audio signal at the AES input 3. `AES` indicates if the input signal is `OK`, `Clipped` or `NA` (not available).

AES4-In

The status item `AES4-In` indicates the condition of the AES/EBU audio signal at the AES input 4. `AES` indicates if the input signal is `OK`, `Clipped` or `NA` (not available).

Audio-A1

The status item `Audio-A1` indicates the condition of the signal after the shuffler.

`OK`, `Clipped`, `Silence` or `NA`

Audio-A2

The status item `Audio-A2` indicates the condition of the signal after the shuffler.

`OK`, `Clipped`, `Silence` or `NA`

Audio-A3

The status item `Audio-A3` indicates the condition of the signal after the shuffler.

`OK` , `Clipped`, `Silence` or `NA`.

Audio-A4

The status item `Audio-A4` indicates the condition of the signal after the shuffler.

`OK` , `Clipped`, `Silence` or `NA`.

Audio-B1

The status item `Audio-B1` indicates the condition of the signal after the shuffler.

`OK` , `Clipped`, `Silence` or `NA`.

Audio-B2

The status item `Audio-B2` indicates the condition of the signal after the shuffler.

`OK` , `Clipped`, `Silence` or `NA`.

Audio-B3

The status item `Audio-B3` indicates the condition of the signal after the shuffler.

`OK` , `Clipped`, `Silence` or `NA`.

Audio-B4

The status item `Audio-B4` indicates the condition of the signal after the shuffler.

`OK` , `Clipped`, `Silence` or `NA`.

7 Events Menu

Introduction

An event is a special message that is generated on the card asynchronously. This means that it is not the response to a request to the card, but a spontaneous message.

What is the Goal of an event?

The goal of events is to inform the environment about a changing condition on the card. A message may be broadcast to mark the change in status. The message is volatile and cannot be retrieved from the system after it has been broadcast. There are several means by which the message can be filtered.

DIO48 Events

The events reported by the DIO48 are as follows;

Announcements

Announcements is not an event. This item is only used for switching the announcement of status changes on/off. 0=off, other =on

Reference

Reference can be selected between 0 .. 255. 0= no event, 1..255 are the priority setting. If the reference is lost an Event will be generated at the priority.

Audio-Data

`Audio-Data` reports the audio signal being clipped at 0dB and can be selected between 0 .. 255. 0= no event, 1..255 is the priority setting.

What information is available in an event?

The message consists of the following items;

1) A message string to show what has happened in text, for example: “INP_LOSS”, “REF_LOSS”, “INP_RETURN”.
2) A tag that also shows what happens, but with a predefined number: e.g. 1 (= loss of input), 2 (= loss of reference), 129(= 1+128 = return of input). For a list of these predefined tags see the table on the next page.
3) A priority that marks the importance of an event. This value is defined by the user and can have any value between 1 and 255, or 0 when disabled.
4) A slot number of the source of this event.

The Message String

The message string is defined in the card and is therefore fixed. It may be used in controlling software like Synapse Set-up to show the event.

The Tag

The tag is also defined in the card. The tag has a fixed meaning. When controlling or monitoring software should make decisions based on events, it is easier to use the tag instead of interpreting a string. The first implementation is the tag controlled switch in the GPI16.

In cases where the event marks a change to fault status (e.g. 1 for Loss of Input) the complement is marked by the tag increased by 128 (80_{hex}) (e.g. 129 (81_{hex}) for Return of Input).

Defining Tags

The tags defined for the DIO48 are:

Event Menu Item	Tag		Description
Announcements	0 or NA	0 or NA	Announcing of report and control values
Reference	02_{hex}=REF_LOSS	82_{hex}=REF_RETURN	reference lost or returned
Audio-Data	05_{hex}=AUDIO_ERROR	85_{hex}=AUDIO_OK	Audio data error

The Priority

The priority is a user-defined value. The higher the priority of the alarm, the higher this value. Setting the priority to Zero disables the announcement of this alarm. Alarms with priorities equal or higher than the Error Threshold setting of the RRC will cause the error LED on the Synapse rack front panel to light.

The Address

Together with the message string or the tag, the slot number or address of the card is relevant to be able to assign the event to a certain card.

8 LED Indication

Error LED

The error LED indicates an error if the internal logic of the DIO48 card is not configured correctly or has a hardware failure.

Input LED

This LED indicated the presence of a valid AES/EBU signal on the input. The presence of an analogue audio signal is not indicated

Reference LED

This LED indicates the presence of a valid reference signal and that the DIO48 is locked.

Data Error LED

This led indicates two different types of errors:

- Audio signal 1, 2, 3 or 4 of the local outputs are clipped.

Connection LED

This LED illuminates after the card has initialised. The LED lights for 0.5 seconds every time a connection is made to the card.

9 Block Schematic

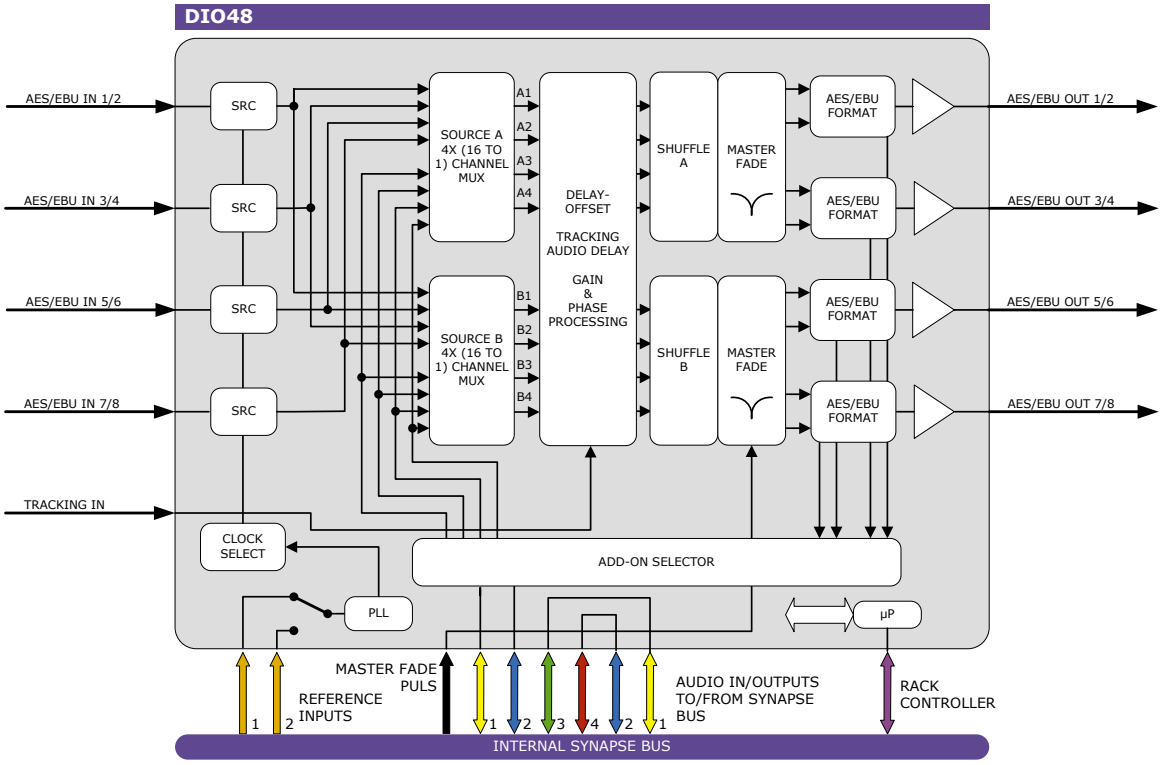

10 Connector Panel

The DIO48 can be used with the following backplanes: BPL01, BPL04 and BPL05D:

BPL01 BPL05D BPL04

!Unused inputs and outputs must be terminated with the correct impedance!

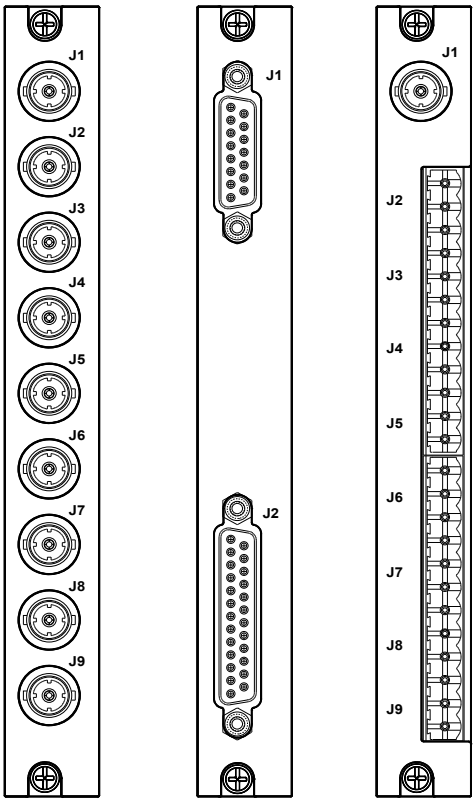

BPL01-BPL04
J1 – tracking input
J2 – AES input1
J3 – AES input2
J4 – AES input3
J4 – AES input4
J5 – AES output1
J6 – AES output2
J7 – AES output3
J8- AES output4

BPL05D see table on next page (Page26).

	Description	Pin Number
Tracking	Hot	J1-3
	Ground	J1-9
AES input 1	Hot-input 1	J2-2
AES input 1	Cold–input 1	J2-1
AES input 1	Ground–input 1	J2-14
AES input 2	Hot –input 2	J2-16
AES input 2	Cold–input 2	J2-15
AES input 2	Ground-input 2	J2-3
AES input 3	Hot –input 3	J2-5
AES input 3	Cold–input 3	J2-4
AES input 3	Ground–input 3	J2-17
AES input 4	Hot –input 4	J2-19
AES input 4	Cold–input 4	J2-18
AES input 4	Ground–input 4	J2-6
AES output 1	Hot-output 1	J2-7
AES output 1	Cold-output 1	J2-8
AES output 1	Ground-output 1	J2-20
AES output 2	Hot-output 2	J2-21
AES output 2	Cold-output 2	J2-22
AES output 2	Ground-output 2	J2-9
AES output 3	Hot -output 3	J2-10
AES output 3	Cold-output 3	J2-11
AES output 3	Ground-output 3	J2-23
AES output 4	Hot -output 4	J2-24
AES output 4	Cold-output 4	J2-25
AES output 4	Ground-output 4	J2-12

EVS Headquarters
Liège Science Park
13, rue Bois St Jean
B-4102 Seraing
Belgium

Corporate
+32 4 361 7000

North & Latin America
+1 973 575 7811

Asia & Pacific
+852 2914 2501

Other regional offices
www.evs.com/contact

To learn more about EVS go to **www.evs.com**