INSTALLATION & CONFIGURATION MANUAL

GMD100

3GB/S, HD, SD SDI MEDIUM TIME DELAY WITH AUTOMATIC TRACKING FUNCTIONALITY

SYNAPSE

Copyright

Disclaimer

The information in this manual is furnished for informational use only and subject to change without notice. While every effort has been made to ensure that the information contained in this user manual is accurate, up-to-date and reliable, EVS Broadcast Equipment cannot be held responsible for inaccuracies or errors that may appear in this publication.

Improvement Requests

Your comments will help us improve the quality of the user documentation. Do not hesitate to send improvement requests, or report any error or inaccuracy on this user manual by e-mail to doc@evs.com.

Regional Contacts

The address and phone number of the EVS headquarters are usually mentioned in the **Help > About** menu in the user interface.

You will find the full list of addresses and phone numbers of local offices either at the end of this user manual (for manuals on hardware products) or on the EVS website on the following page: http://www.evs.com/contacts.

User Manuals on EVS Website

The latest version of Media Infrastructure manuals are available at: https://mi-sftp.evs.com/
The user manuals for other EVS products can be found at the EVS download center, on the following webpage: https://www.evs.com/en/download-area.

WARNING: TO REDUCE THE RISK OF FIRE OR ELECTRICAL SHOCK, DO NOT EXPOSE THIS APPLIANCE TO RAIN OR MOISTURE

● ALWAYS disconnect your entire system from the AC mains before cleaning any component. The product frame (SFR18 or SFR04) must be terminated with three-conductor AC mains power cord that includes an earth ground connection. To prevent shock hazard, all three connections must always be used.
● NEVER use flammable or combustible chemicals for cleaning components.
● NEVER operate this product if any cover is removed.
● NEVER wet the inside of this product with any liquid.
● NEVER pour or spill liquids directly onto this unit.
● NEVER block airflow through ventilation slots.
● NEVER bypass any fuse.
● NEVER replace any fuse with a value or type other than those specified.
● NEVER attempt to repair this product. If a problem occurs, contact your local EVS distributor.
● NEVER expose this product to extremely high or low temperatures.
● NEVER operate this product in an explosive atmosphere.

Warranty: EVS warrants their products according to the warranty policy as described in the general terms. That means that EVS Broadcast Equipment SA can only warrant the products as long as the serial numbers are not removed.

Date created: 05-01-2016
Date last revised: 01-11-2018

This product complies with the requirements of the product family standards for audio, video, audio-visual entertainment lighting control apparatus for professional use as mentioned below.

CE	EN60950	Safety
	EN55103-1: 1996	Emission
	EN55103-2: 1996	Immunity

EVS Broadcast Equipment GMD100 FC Tested To Comply With FCC Standards FOR HOME OR OFFICE USE	This device complies with part 15 of the FCC Rules Operation is subject to the following two conditions: (1) This device may cause harmful interference, and (2) This device must accept any interference received, including interference that may cause undesired operation.

Index

1 Introduction to Synapse

An Introduction to Synapse

Synapse is a modular system designed for the broadcast industry. High density, intuitive operation and high quality processing are key features of this system. Synapse offers a full range of converters and processing modules. Please visit the EVS Broadcast Equipment SA Website at http://www.evs.com to obtain the latest information on our new products and updates.

Local Control Panel

The local control panel gives access to all adjustable parameters and provides status information for any of the cards in the Synapse frame, including the Synapse rack controller. The local control panel is also used to back-up and restore card settings. Please refer to the rack controller manuals for a detailed description of the local control panel, the way to set-up remote control over IP and for frame related settings and status information.

Remote Control Capabilities

The remote control options are explained in the rack controller (RRC, RRS, ERC or ERS) manual. The method of connecting to a computer using Ethernet is also described in these manuals.

! **CHECK-OUT:** "EVS CORTEX" SOFTWARE WILL INCREASE SYSTEM FLEXIBILITY OF ONE OR MORE SYNAPSE FRAMES

Although not required to use Cortex with a Synapse frame, you are strongly advised to use a remote personal computer or laptop PC with EVS Cortex installed, as this increases the ease of use and understanding of the modules.

2 Unpacking and Placement

Unpacking

The EVS Synapse card must be unpacked in an anti-static environment. Care must be taken NOT to touch components on the card – always handle the card carefully by the edges. The card must be stored and shipped in anti-static packaging. Ensuring that these precautions are followed will prevent premature failure from components mounted on the board.

Placing the card

The Synapse card can be placed vertically in an SFR18 frame or horizontally in an SFR04, SFR08 and SFR Mobile frame. Locate the two guide slots to be used, slide in the mounted circuit board, and push it firmly to locate the connectors.

Correct insertion of card is essential as a card that is not located properly may show valid indicators, but does not function correctly.

Note On power up all LED's will light for a few seconds, this is the time it takes to initialise the card

3 A Quick Start

When powering-up

On powering up the Synapse frame, the card set will use basic data and default initialisation settings. All LED's will light during this process. After initialisation, several LED's will remain lit – the exact number and configuration is dependent upon the number of inputs connected and the status of the inputs.

Changing settings and parameters

The front panel controls or the Synapse Cortex can be used to change settings. An overview of the settings can be found in chapter 5, 6 and 7 of this manual.

Front Panel Control

Front Panel Display and Cursor

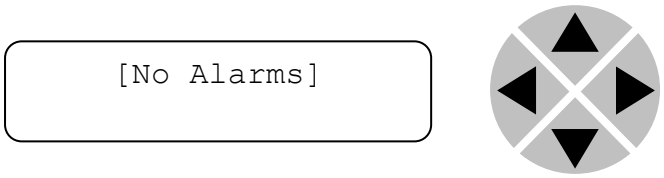

Settings are displayed and changed as follows;

Use the cursor 'arrows' on the front panel to select the menu and parameter to be displayed and/or changed.

Press ►	To go forward through the menu structure.
Press ◄	To go back through the menu structure.
Press ▲	To move up within a menu or increase the value of a parameter.
Press ▼	To move down through a menu or decrease the value of a parameter.

Note Whilst editing a setting, pressing ► twice will reset the value to its default

Example of changing parameters using front panel control

With the display as shown below

```
RRC18 [Select Card]
>S01=SFS10
```

Pressing the ► selects the SFS10 in frame slot 01.

The display changes to indicate that the SFS10 has been selected. In this example the `Settings` menu item is indicated.

```
SFS10 [Select Menu]
>Settings
```

Pressing the ► selects the menu item shown, in this example `Settings`.

(Pressing ▲ or ▼ will change to a different menu eg `Status, Events)`.

The display changes to indicate that the SFS10 `Settings` menu item `SDI-Format` has been selected and shows that it current setting is `Auto`.

```
SFS10 [Settings]
>SDI-Format=Auto
```

Pressing the ► selects the settings item shown, in this example `SDI-Format.`

(Pressing ▲ or ▼ will change to a different setting, eg `Mode, H-Delay)`.
The display changes to indicate that the SFS10 `Edit Setting` menu item `SDI-Format` has been selected.

```
SFS10 Edit Setting]
SDI-Format>Auto
```

To edit the setting of the menu item press ▲ or ▼.

All menu items can be monitored and/or changed in this way. Changing a setting has an immediate effect.

EVS Cortex Software

Synapse Cortex can be used to change the settings of Synapse modules from a PC, either locally or remotely. The software enables communication based on TCP/IP between the Setup PC and Synapse frames/modules.

Each Synapse frame is addressed through its rack controller's unique IP address, giving access to each module, its menus and adjustment items. EVS Cortex has access to data contained within the Synapse module and displays it on a GUI. The software has an intuitive structure following that of the module that it is controlling.

For operation of EVS Cortex, please refer to the Cortex help files.

Menu Structure Example

Slot	Module	Item	Parameter	Setting
▲				
▲				
S02		Identity		
▲		▲		
S01	SFS10 ▶	Set-tings ▶	Standard_dig ▶	Auto
▼		▼	▼	▼
S00	RRC18	Status	Mode	625
		▼	▼	▼
		Events	Ref-Input	525
			▼	
			H-Delay	
			▼	
			▼	

Note Further information about Front Panel Control and Synapse Cortex can be obtained from the RRC, RRS, ERC and ERS operational manuals and the Cortex help files

4 The GMD100 Card

Introduction

The GMD100 is a medium time 3Gb/s, HD and SD-SDI uncompressed baseband video delay. It can store and delay SDI video. It can store and delay up to 8 seconds 3Gb/s and 16 seconds in HD and up to 64 seconds in SD.

One of the unique features is the capability of syncing a delay to the time code of the second input. An example use of this card is when a video feed is sent down two separate paths or networks, and the delay between the two is unknown. The card on each path would add the appropriate delay to its incoming video to ensure that the output was co-timed. This co-timed output can for example be fed into a backup switch and seamless switching with no time hops is achieved.

Features

- Autophaser and Framesync
- Adjustable offset delay up to
  - 8 seconds 3Gb/s
  - 16 seconds HD
  - 64 seconds SD
- Adjustment in frames, lines and pixels
- Tracking audio delay with offset adjustment
- Adjustable full transparent delay mode for video, audio and ancillary data
- Locks
  - SDI input or reference
  - Possibility to add an offset to incoming video to match the offset timecode
- Full control and status monitoring through the front panel of the SFR04/SFR08/SFR18
- frame and the Ethernet port (ACP)

Applications

- Dynamic delay compensation for main/backup redundant path applications.
- Timing correction in 3Gb/s, HD and SD studios
- ‘Late’ embedded audio correction (lipsync)

Dynamic Delay

The diagram below shows an example situation where the dynamic delay card is configured to ensure a 6 frame delay from the Reference Timecode.

1. The card will first sync the incoming video
2. It will then compare the number of frames by which the incoming video is delayed against the reference timecode. It will then delay the video by the correct number of frames to result in the configured delay value

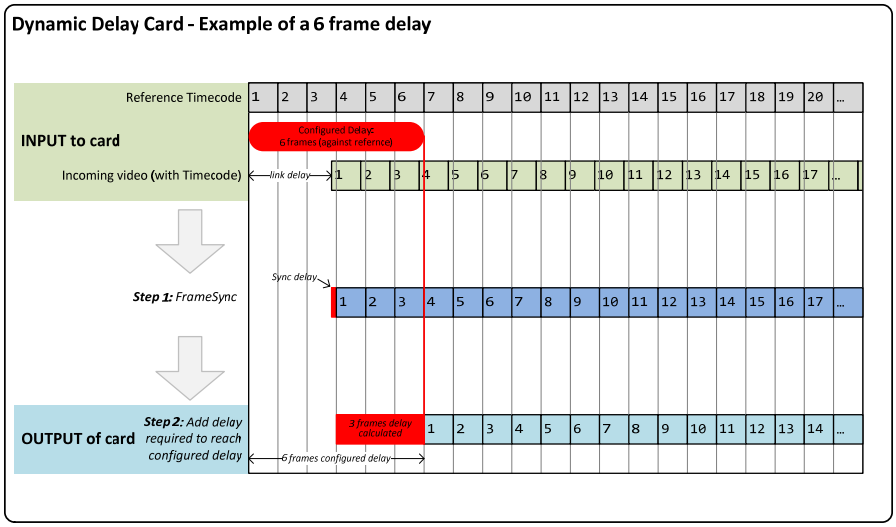

The card will work in SD, HD and 3G mode. The input reference signal may not be in the same video format as the input video signal (but would have the same framerate), however both signals will include a SMPTE 12M-2 ANC VITC time code (Time of Day).
For example, the reference time code may be SD, whereas the input video may be HD.

Losing timecode on main or tc-reference signal does not affect the output signal and the delay hold its previous value.

Jump of the timecode is however not error free. The card will always try to follow the timecode read from the inputs.
On a short glitch within its range the card jumps to that location and back. There is no filter or hysteresis on this logic.

The maximum video delay of the card in 1080i50 is 484 frames and the timecode measurements are limited to + and -1000 frames. Timecode with a difference outside 484 frames gives a video delay of 484frames but the audio delay can be up to the complete 1000 causing a lipsync issue.
This is only when the audio is de-embedded and embedded again.
In full transparent mode the Audio Video delay stays the same.

Outside the 1000 range the measurement is clipped to 1000.
However as described above the audio and video delay are not in sync.

Removing the timecode reference signal from the GMD100 has the following effect.
No disturbance on the main (SDI input 1) channel.

```
Status - sInp2:          NA
Status - sInpB:          NA
Status - sInpB_CRC_EDH:  NA
Status - sInpB_ATC:      NA
Status - sInpB_TC_Lost:  Error
```

Reconnecting the timecode reference signal to the GMD100 has the following effect
One flash, picture and audio, error. Looks like one frame. Due to recalculating.

```
Status - sInpB:          1080i50
Status - sInpB_CRC_EDH:  OK
Status - sInp2:          1080i50
Status - sInpB_TC_Jump:  None
Status - sInpB_ATC:      RP188 VITC#1
Status - TC_Diff_A_B:    -1000 fr
Status - Add-Delay:      484 fr
Status - IO-F-DelayA:    856 fr
Status - sInpB_TC_Lost:  OK
Status - TC_Diff_A_B:    1 fr
Status - Add-Delay:      4 fr
Status - IO-F-DelayA:    4 fr
```

The card always comes back in the know previous state.

Block schematic

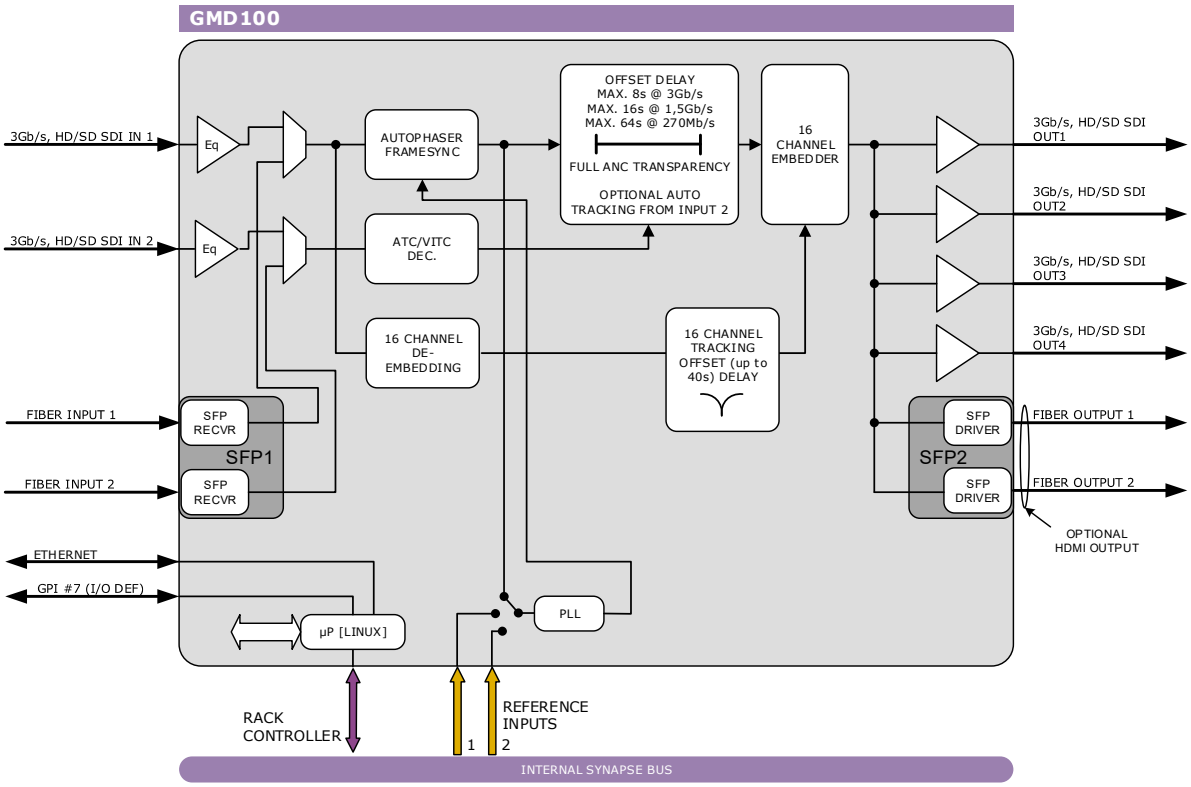

5 Settings Menu

Introduction

The settings menu displays the current state of each GMDxxx setting and allows you to change or adjust it. Settings can be changed using the front panel of the Synapse frame (SFR18, SFR08 or SFR04) or with Cortex. Also the SCP08 control can be used. Please refer to chapter 3 for information on the Synapse front panel control and Cortex.

Note: All items preceded with a #-sign are part of the presets.

SYSTEM SETTINGS

IO-Ctrl

This function isn't currently not accessible but will be enabled in a software release in the future.

IO_Prst_Act

With this item you can manually change the currently active IO settings. Can be any preset between 1 and 8. By default it is set to 1. All menu settings that are preceded with a '`#` '-prefix under the '`SYSTEM SETTINGS`' header are part of the preset.

IO_Prst_Edit

Here you can select which of the 8 selectable IO settings presets you want to edit. Changing this will not change the active preset, unless the currently active preset is the same you are going to edit. All menu settings that are preceded with a '`#` '-prefix under the '`SYSTEM SETTINGS`' header are part of the preset.

PrstEditView

With this setting set to `Follow Active`, the edit preset settings (like for instance `Audio_Prst_editA`) will follow the active preset when the active preset is changed. This to avoid confusion when changing the active. Set to `Independent` the edit preset will not automatically follow active preset changes. By default set to `Follow Active`.

#Inp_SelA

With this item you can select which input you want to use for Channel A. It is possible to select physical inputs; `SDI-1`, `SDI-2`, `SDI-3`, `SDI-4`, `SFP1-1`, `SFP1-2`, `SFP2-1` or `SFP2-2`. You can also choose a `Zoneplate` or `Colorbar` as input. The default for this setting is `SDI-1`.

#Inp_SelB

With this item you can select which input you want to use for Channel B. It is possible to select physical inputs; `SDI-1`, `SDI-2`, `SDI-3`, `SDI-4`, `SFP1-1`, `SFP1-2`, `SFP2-1` or `SFP2-2`. The default for this setting is `SDI-2`.

#Out-FrmtA

With `Out-Frmt` you can set what the output format should be. Possible settings are:

- `1080p60`, `1080p50` (default)
- `1080i60`, `1080i50`
- `720p60`, `720p50`
- `SD525`, `SD625`

#Output-MapA

With output map you can select the output mapping according `level-A` or `Level-B-DL` (=dual link). In `Auto` (default) it follows the detected mapping on the input.

#F-delayA

`F-Delay` sets the amount of delayed Frames for each corresponding input. The available range is from 0 to 1936 frames (dependent on the I/O). Default is `0F`. The preset master for this is `Out-Frmt`, hence the '#'-prefix.

Format	Max F-delay	Delay 50Hz	Delay 59,94Hz
1080p50/p60	484fr	9,68 sec	8,07sec
1080i50/i60	484fr	19,36 sec	16,15 sec
720p50/p60	968fr	19,36 sec	16,15 sec
SD625/525	1936fr	77,44 sec	64,60 sec

#V-delayA

`V-Delay` setting allows adjustment of the vertical phase of the corresponding output signal with respect to the selected reference input.

The `V-Delay` setting gives a delay in addition to the reference timing. For example: if the `V-Delay` is set to 10 TV HD lines, the output signal will be delayed by reference timing + 10 TV HD lines. The signal is delayed (advanced) with respect to the phase of the reference signal. The available range is from 0 to a maximum of 1125 lines (dependent on I/O format). The default setting is `0ln`. The preset master for this is `Out-Frmt`, hence the '#'-prefix.

#H-delayA

The H-Delay setting allows adjustment of the Horizontal phase of the corresponding output signal with respect to the selected reference input.

The H-Delay setting gives a delay in addition to the reference timing. For example: if the H-Delay is set to 10 pixels, the output signal will be delayed by reference timing + 10 pixels. The signal is delayed (advanced) with respect to the phase of the reference signal. The available range is from 0 to a maximum of 5124 pixels (dependent on I/O format). The default setting is `0px`. The preset master for this is `Out-Frmt`, hence the '#'-prefix.

#F_delayA_AlignA

This setting sets the timecode type to be used for delay alignment. Default is off. Setting can be set to Off, VITC, ATC or both.

#TC_Align_SetA

The `TC_Align_SetA` allows correction of the delay of the card according to the timecode measurement difference of the selected channel A and B. Modes are `Off, Auto, Once` and `Hold`.

When set to `Off` the additional delay is set to 0 and the `Add-Delay_Range` status is set to OK

In `Auto` the delay continually tracks the difference in timecode of video channel A and B. The `Add-Delay_Range` status indicates if the additional delay is within range.

When set to `Once` the delay is set once on the rising edge of this signal with the difference in timecode of video channel A and B. If you want to set the value again the setting must be set to `Hold` and back to `Once` again.

In `Hold` the additional delay is fixed and not updated anymore. The `Add-Delay_Range` status still indicates if the additional delay is within range. `Hold` is often used in combination with `Once.`

#F_Align_StepA

This setting selects the amount of frames that will be counted before a frame delay step of the new frame delay is realized. For example, if the old delay is 100 frames and the new delay is 200 frames and this setting is set to 2. The new delay increases each frame from 100, 100, 101, 101, 102, 102 till 200. Range is `0fr..1000fr.` Default is 0 which result in an immediate response.

#TC_Lost_After

This setting sets the amount of frames before a loss of timecode will occur. Default is 0 frames and will trigger loss of timecode instant. The maximum value is 500 frames

#Freeze_A

`Freeze` enables the capture of one Video Frame for all 4 channels. The settings of `Freeze` are `On` or `Off`. The default setting is `Off`.

Lock-Mode

`Lock-Mode` determines whether the card is locked to his `input` (`SDI1` or `SDI2`), to the reference (`Ref1` or `Ref2`) or `Auto-SDI` (SDI with automated switchover in case of ref loss). `Ref1` is default

#VITC_Ln_InA

Select which line VITC timecode is inserted in the input. Range is line 7 up to and including line 22

#ATC_TYPE_SEL

Select which ATC type should be de-embedded. Default is `VITC`. Can be set to `VITC` or `LTC`.

#S352_Insert

Because the PID can sometimes interfere with timecode this option turns of PID insertion. Default is `On`. Can be set to `On` or `Off`.

Delay-Status

It is possible to display (in the status menu `IODelayA` and `IODelayB`) the processing time of the card in the status menu. This setting allows you to switch this function `On` or `Off`. Default setting is `Off`

PatternSpeed

Sets the speed of the test-pattern (see settings `Inp_SelA` and `Inp_SelB`) animation between 0 (still) and 14 (fast). Default 1.

Note: Setting this menu item to 15 turns on a OSD function that insetrs the incoming timecode on screen for debugging purposes.

Input_Loss_A

Here you can set what the output of channel A should be when the input is lost. Can be `Freeze`, `Colorbar`, `Zoneplate`, `Black`, `Grey, Green or Mute`. When `Mute` is selected the SDI output is muted so the equipment after the GMD will detect a signal loss.

VIDEO PROC

GainA

With this setting you control the overall gain of the video of the corresponding channel between 50 and 150%. Default is 100%.

R-GainA

`R-Gain` controls the Red gain of the corresponding channel. The control range is between 50% and 150%. The default setting is 100%.

G-GainA

`G-Gain` controls the Green gain of each corresponding channel. The control range is between 50% and 150%. The default setting is 100%.

B-GainA

`B-Gain` controls the Blue gain of the corresponding channel. The control range is between 50% and 150%. The default setting is 100%.

BlackA

`Black` controls the total R-G-B Black gain of each corresponding channel. The control range is between –128bit and 127bit. The default setting is 0bit.

R-BlackA

`R-Black` controls the Red-Black of each corresponding channel. The control range is between –128bits and 127 bits in steps of 1 bit The default setting is 0 bit.

G-BlackA

`G-Black` controls the Green-Black of each corresponding. The control range is between –128bits and 127 bits in steps of 1 bit The default setting is 0 bit.

B-BlackA

`B-Black` controls the Blue-Black of each channel. The control range is between –128bits and 127 bits in steps of 1 bit.
The default setting is 0 bit.

AUDIO PROC AMP

Audio-PhaseA

If this setting is set to *Align*, the card ensures audio-phase alignment between multiple audio channels and audio groups, which is necessary for multi-channel (surround) purposes. If errors in the signal-chain occur the de-embedder blocks reset synchronously to maintain audio-phase-alignment. If this setting is set to *Off*, the card *eats-all* audio including errors. Even if there are DBN/ANC/ECC or channel-sequence errors, the de-embedder will pass them. Be aware that audio-phase-alignment between multiple audio channels and audio groups cannot be maintained if this setting is set to *Off*.

Note: This setting can be helpful to solve problems in the field using equipment which doesn't follow the standards correctly.

	EMBEDDER
Audio_CtrlA	With this item you select how audio proc amp presets for Channel A are controlled: Manually (`Manual`) or via GPI-triggers (`GPI`, `GPI-A`, `GPI-B` or `GPI-C`). Default is `Manual`
Audio_Prst_ActA	With this item you can manually change the currently active preset of channel. Can be any preset between 1 and 16. By default it is set to 1. All menu settings that are preceded with a '`#Ins`'-prefix are part of the preset.
Audio_Prst_EditA	Here you can select which of the 16 selectable presets you want to edit for Channel A. Changing this will not change the active preset, unless the currently active preset is the same you are going to edit. All menu settings that are preceded with a '`#Ins`'-prefix are part of the preset.
#Silence-TimeA	If the embedded audio contains silence, this can be reported by the card. This setting allows you to determine how many seconds it takes before the card reports the silence. This setting can be set in a range from 1 sec to 255 sec. The default setting is 10sec.
#Silence-LevelA	With this setting you set a loudness threshold for the silence detection. Can be set between -100 and -20 dBFS. When the audio goes below this value, a silence alert is triggered. Default is -60dBFS.

#Emb1_GrpSel	With this setting you can turn on or off the audio embedder groups individually. An embedder group can be turned off (muted) by setting the corresponding group to '_'.
	Can be set to one of the following values (default is `1234`):
	`____`
	`1___`
	`_2__`
	`12__`
	`__3_`
	`1_3_`
	`_23_`
	`123_`
	`___4`
	`1__4`
	`_2_4`
	`12_4`
	`__34`
	`1_34`
	`_234`
	`1234`

#Emb1_Ch01/04 ~ #Emb1_Ch13/16

These settings allow you to select the source of the audio channels which need to be embedded into the SDI output.
You can choose between the following sources for each of the sixteen Ch01/16 channels:

- SDI-de-embed Ch1 (value '00'), SDI-de-embed Ch2 (value '01'), to SDI-de-embed Ch16 (value '0F'), Dolby decoder out Dec1 (value '10') to Dec8 (value '17'), Dolby encoder out Enc1 (value '18'), Dolby encoder out Enc2 (value '19'), Dolby decoder monitor out Dec_mon1 (value '1A'), Dolby decoder monitor out Dec_mon2 (value '1B')

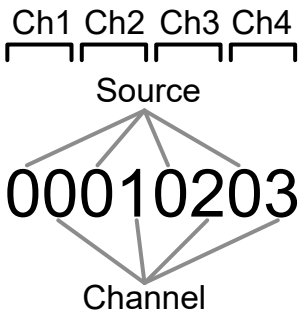

Defaults are (source: SDI_Input_1, channels: straight):

- #Emb1_Ch01/04 = 00010203
- #Emb1_Ch05/08 = 04050607
- #Emb1_Ch09/12 = 08090A0B
- #Emb1_Ch13/16 = 0C0D0E0F

NETWORK

IP_Conf0

With this setting you can let the card obtain an IP address automatically via `DHCP`, or appoint a `manual` set IP address. By default this setting is set to `Manual`.

mIP0

When `IP_Conf0` is set to `manual`, you can type in the preferred IP address here. By default it is set to 172.16.1.2

mNM0

With `IP_Conf0` set to `manual`, with this setting you can set a Netmask. Default is 255.255.0.0

mGW0

With `IP_Conf0` set to `manual`, this setting let you set a Standard Gateway. Default is set to 172.16.0.1

NetwPrefix0

Here you can set the proper network prefix if required.

6 Status Menu

Introduction

The status menu indicates the current status of each item listed below.

SFP STATUS

SFP1-Vendor

These status item display the name of the vendor of the SFP input/output module A.

SFP1-Type

These status items display the type name/number of SFP input/output module A.

SFP1-Temp-Stat

These indicate whether the temperature of SFP input/output module A is `Too_High`, `High`, `OK`, `Low` or `Too_Low`. Can also be `NA` in case Temperature monitoring is not available or the module is not inserted.

SFP1-Volt-Stat

These indicate whether the voltage usage of SFP input/output module A is `Too_High`, `High`, `OK`, `Low` or `Too_Low`. Can also be `NA` in case Voltage monitoring is not available or the module is not inserted.

Port1/2-Enabled

These item indicate whether the corresponding output port on SFP output module A is `enabled`, `disabled` or `NA` (Not available, when no input signal is available or an input module is inserted.)

Port1/2-Power

These status items indicate the current transmitter power of the specified port on SFP output module A between 0mW and 6.55mW. When a receiver is installed or no SFP module is inserted this value is 0.

Port1/2-Power-Stat

These indicate whether the output power of the specified port on SFP output module A is `Too_High`, `High`, `OK`, `Low` or `Too_Low`. Can also be `NA` in case of an input module or no module is inserted.

Port1/2-Bias

These status items indicate the current laser bias of the specified port on SFP module A is between 0mA and 300mA. When there is a non fiber SFP or an input module is inserted, this value will be 0.

Port1/2-Bias-Stat

These indicate whether the laser bias of the specified port on SFP output module A is `Too_High`, `High`, `OK`, `Low` or `Too_Low`. This can also be `NA` in case laser bias monitoring is not available or no output module is inserted.

Port1/2-Wavelength	Indicates the current wave length of the corresponding output port on the SFP output module A between 0nm and 2000nm. When there is a non fiber SFP or RX module installed, this value will be 0.
SFP2-Vendor	These status item display the name of the vendor of the SFP input/output module B.
SFP2-Type	These status items display the type name/number of SFP input/output module B.
SFP2-Temp-Stat	These indicate whether the above indicated temperature of SFP input/output module B is `Too_High`, `High`, `OK`, `Low` or `Too_Low`. This can also be `NA` in case Temperature monitoring is not available or the module is not inserted.
SFP2-Volt-Stat	These indicate whether the above indicated voltage usage of SFP input/output module B is `Too_High`, `High`, `OK`, `Low` or `Too_Low`. This can also be `NA` in case Voltage monitoring is not available or the module is not inserted.
Port3/4-Enabled	These item indicate whether the corresponding output on SFP output module is `enabled`, `disabled` or `NA` (Not available, when no input signal is available or an input module is inserted)
Port3/4-Power	These status items indicate the current transmitter power of the specified port on SFP output module B between 0mW and 6.55mW. When an input module is inserted or no SFP module is inserted this value is 0.
Port3/4-Power-Stat	These indicate whether the output power of the specified port on SFP output module B is `Too_High`, `High`, `OK`, `Low` or `Too_Low`. Can also be `NA` in case of an input module or no module is inserted.
Port3/4-Bias	These status items indicate the current laser bias of the specified port on SFP output module B is between 0mA and 300mA. When there is a non fiber SFP or RX SFP installed, this value will be 0.
Port3/4-Bias-Stat	These indicate whether the laser bias of the specified port on SFP output module B is `Too_High`, `High`, `OK`, `Low` or `Too_Low`. This can also be `NA` in case laser bias monitoring is not available or no module is inserted.
Port3/4-Wavelength	Indicates the current wave length of the corresponding output port on SFP output module B between 0nm and 2000nm. When there is a non fiber SFP or RX module installed, this value will be 0.

sInp1 ~ sInp2	This status item indicates the presence and the format of a valid signal on physical input 1 and 2. This is displayed as: ▪ `1080P60` ▪ `1080p50` ▪ `1080i60` ▪ `1080i50` ▪ `720p60` ▪ `720p50` ▪ `SD525` ▪ `SD625`
sInpA ~ sInpB	This status item indicates the presence and the format of a valid signal on processing channel A and B. This is displayed as: ▪ `1080P60` ▪ `1080p50` ▪ `1080i60` ▪ `1080i50` ▪ `720p60` ▪ `720p50` ▪ `SD525` ▪ `SD625`
sInpA_CRC_EDH ~ sInpB_CRC_EDH	This item indicates CRC and EDH errors on processing channel A and B. Can be: ▪ `OK` ▪ `Error` ▪ `NA`
sInpA_Map ~ sInpB_Map	This item indicates what the mapping of the signal is on processing channel A to B. Can be: ▪ `Level-A` ▪ `Level-B-DL` ▪ `NA`
IODelayA	Displays the total delay in milliseconds of the outputs. Can be a value between `0ms` and `16383ms`.
TC_Diff_A_B	Difference of the timecode between video channel A and video channel B. Range is `-1000fr..1000fr`
sInpA_TC_Jump ~ sInpB_TC_Jump	Displays if there is a jump in timecode. Default is `None`. Can be `Forwards` or `Backwards`.
Add-Delay	Displays the added delay on top of the `TC_Diff_A_B` status to reach the value set in the `#F-delayA`. Range is 0fr..484fr

Add-Delay-Range	Displays an error if #F-delayA setting is smaller than the TC_Diff_A_B status.
IO-F-DelayA	Displays the input to ouput delay in frames.
Sync-DelayA	Displays the frame-sync delay in ms.
sInpA_TC_Lost ~ sInpA_TC_Lost	Displays if the timecode is lost. Can show OK or Error.
sInpA_VITC ~ sInpB_VITC	Shows if VITC is present. Can show NA or Ok.
sInpA_ATC ~ sInpB_ATC	Shows which type of ATC is present. Can show NA, RP188 LTC, RP188 VITC#1, RP188 VITC#2, RP196 LTC, RP196 VITC or RP215.
Ref-Format	Displays whether there is a correct reference and what the connected reference format is: Can be. ▪ NA ▪ NTSC/480i ▪ PAL/576i ▪ 720p ▪ 1080i ▪ 1080p
SDIADemFrmt01/02 ~ SDIADemFrmt15/16	These status items indicate the detected audio format of each audio pair in the de-embedder of SDI input 1. Can be one of the following formats: ▪ N/A ▪ PCM ▪ Null ▪ AC-3 ▪ TimeStmp ▪ MPEG-1 ▪ MPEG-2 ▪ SMPTE-KLV ▪ Dolby E ▪ Caption data ▪ UserDef ▪ Enh Ac-3

EmbStat_A	Displays the status of the individual audio channels of the embedder output. Displayed as for instance SC_PPPPPPPPPPPPP, when channel 1 is Silence, channel 2 is Clipped, channel 3 is NA (not available) and channel 4 to 16 are Present
	NET STATUS
IP_Addr0	This item displays the status of the IP address. It can be manual, DHCP asking, DHCP Leased or DHCP Infin.
MAC0	This item displays the MAC address of the card.
IP0	This item displays the current IP address of the card.
NM0	This item displays the current Netmask of the card.
GW0	This item displays the current Standard Gateway of the card.

7 Events Menu

Introduction

An event is a special message that is generated on the card asynchronously. This means that it is not the response to a request to the card, but a spontaneous message.

What is the Goal of an event?

The goal of events is to inform the environment about a changing condition on the card. A message may be broadcast to mark the change in status. The message is volatile and cannot be retrieved from the system after it has been broadcast. There are several means by which the message can be filtered.

Events

The events reported by the GMD100 are as follows;

Announcements

`Announcements` is not an event. This item is only used for switching the announcement of status changes on/off. 0=off, other =on

Input_A

Input_A can be selected between 0 .. 255. 0= no event, 1..255 is the priority setting.

Ref-Status

Reference can be selected between 0 .. 255. 0= no event, 1..255 is the priority setting.

Active_Out_A

Active output A can be selected between 0 .. 255. 0= no event, 1..255 is the priority setting.

What information is available in an event?

The message consists of the following items;

1) A message string to show what has happened in text, for example: “INP_LOSS”, “REF_LOSS”, “INP_RETURN”.
2) A tag that also shows what happens, but with a predefined number: e.g. 1 (= loss of input), 2 (= loss of reference), 129(= 1+128 = return of input). For a list of these predefined tags see the table on the next page.
3) A priority that marks the importance of an event. This value is defined by the user and can have any value between 1 and 255, or 0 when disabled.
4) A slot number of the source of this event.

The Message String

The message string is defined in the card and is therefore fixed. It may be used in controlling software like Synapse Set-up to show the event.

The Tag

The tag is also defined in the card. The tag has a fixed meaning. When controlling or monitoring software should make decisions based on events, it is easier to use the tag instead of interpreting a string. The first implementation is the tag controlled switch in the GPI16.

In cases where the event marks a change to fault status (e.g. 1 for Loss of Input) the complement is marked by the tag increased by 128 (80_{hex}) (e.g. 129 (81_{hex}) for Return of Input).

Defining Tags

The tags defined for the card are:

Event Menu Item	Tag		Description
Announcements	0 or NA	0 or NA	Announcement of report and control values
Input_A	01_{hex}=INPA_LOSS	81_{hex}=INPA_RETURN	input A lost or returned
Reference	03_{hex}=REF_LOSS	83_{hex}=REF_RETURN	reference lost or returned
Acive_Out_A	19_{hex}=IN_B->OUT_A	99_{hex}= IN_A->OUT_A	Input B or input A on outputs A

The Priority

The priority is a user-defined value. The higher the priority of the alarm, the higher this value. Setting the priority to Zero disables the announcement of this alarm. Alarms with priorities equal or higher than the Error Threshold setting of the RRC will cause the error LED on the Synapse rack front panel to light.

The Address

Together with the message string or the tag, the slot number or address of the card is relevant to be able to assign the event to a certain card.

8 LED Indication

Error LED

The error LED indicates an error if the internal logic of the card is not configured correctly or has a hardware failure.

Input_x LED

This LED indicated the presence of a valid SDI video signal on input x.

ANC Data LED

Indicates the presence of embedded audio within the input signal.

Reference LED

Indicated the presence of a valid reference signal on the selected reference input connector (ref-1 or ref-2).

Data Error LED

This LED indicates a CRC error.

Connection LED

This LED illuminates after the card has initialized. The LED lights for 0.5 seconds every time a connection is made to the card.

9 Block Schematic

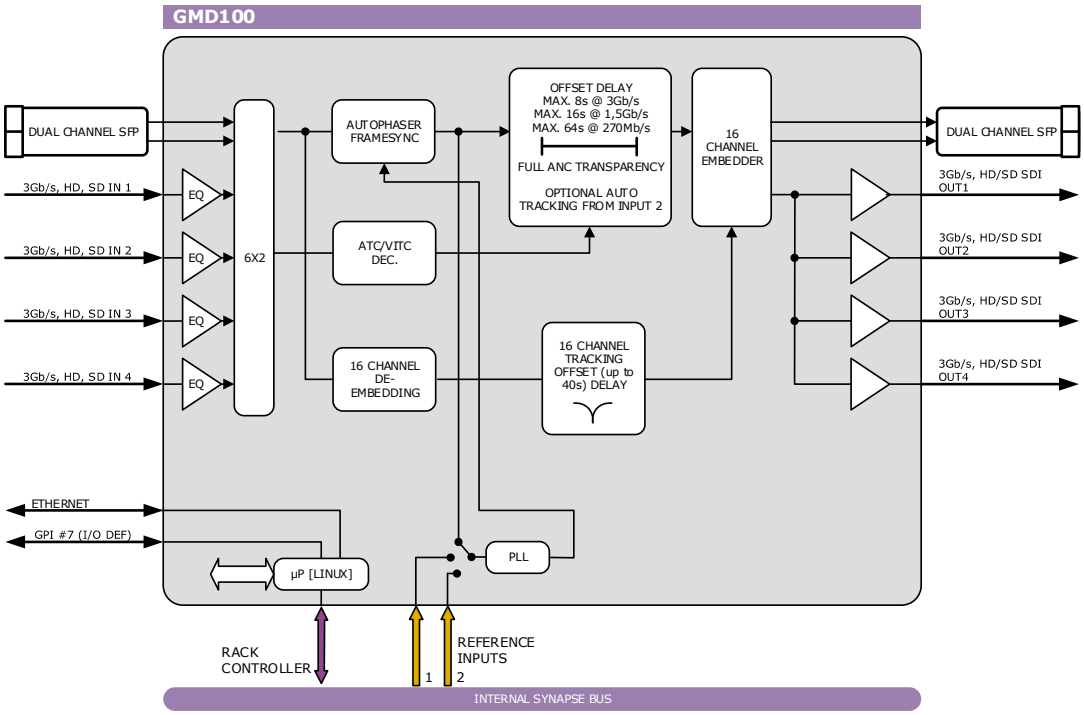

10 Connector Panels

The GMD100 can be used with the BPH32 or the BHX32. The following table displays the pinout of these backpanels in combination with the card.

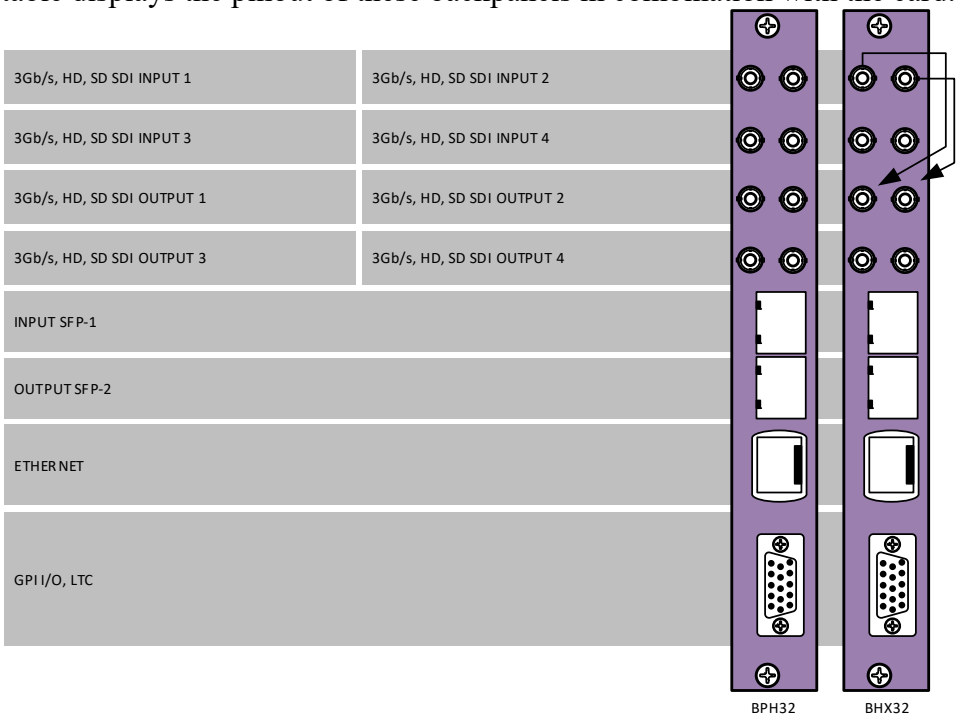

Note Unused inputs and outputs must be terminated with the correct impedance

D-sub pinning

Note: GPI's work in a latching mode

Of the 15-pole subD connector:

pin 01 = RX2B
pin 02 = TX2A
pin 03 = GPI_1
pin 04 = GPI_3
pin 05 = GPI_2
pin 06 = RX2A
pin 07 = GND
pin 08 = LTC-
pin 09 = GPI_4
pin 10 = GPI_7
pin 11 = TX2B
pin 12 = LTC+
pin 13 = GPI_5
pin 14 = GPI_8
pin 15 = GPI_6

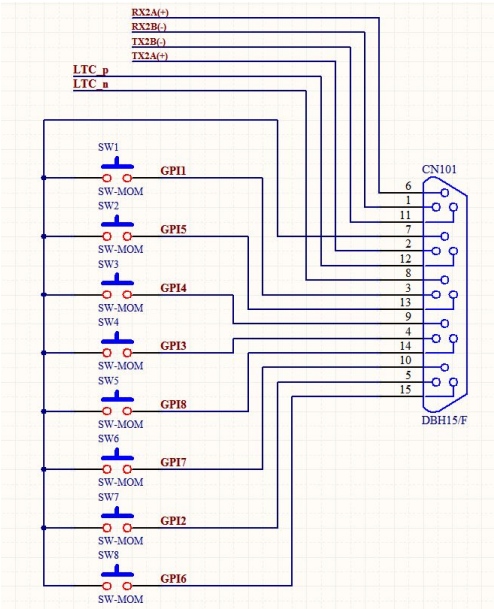

Appendix 2 Reprogramming GMD100 modules

Before you start

Functionality explanation

A Synapse card's functionality is decided by 2 parts: the hardware platform and the software (a.k.a. firmware) that resides on the hardware platform. Changing the firmware of the cards means changing the way the card functions. To keep improving quality and to answer our customer's demands, EVS sometimes releases new software revisions of Synapse cards. These software revisions are formatted in 1 file per revision, with a .spf extension. Customers can download these .spf files from our website, or receive them via e-mail from our support so they can upgrade or reprogram their own cards.

Choosing .spf files

Not all .spf files are compatible with all hardware platforms. To know for certain that you are choosing a compatible .spf file you have to know the hardware revision of your card. This revision number can be found in the menu of the card via the control panel on the frames (select card, select 'about', check HW number) or via Cortex (EVS's control software) (select frame, select card, select 'Identity', check 'hardware rev').

Knowing the hardware revision number, you can go to https://mi-sftp.evs.com/. Here you select the card you wish to upgrade. You will see a list of available firmware upgrades of this particular card. The firmware files that are compatible with your card should display your card's hardware revision number in table next to "Hardware versions". If this is not the case you will not be able to upgrade your card with that file.

Requirements

For reprogramming or upgrading cards, you need the Cortex program installed on a PC or laptop which is connected to the same network to which the card is connected also. You can download the program free of charge from our website. For this this card you need to use Cortex version v1.091 or later. Updating the card must be done locally (direct connection) through the Ethernet of the backplane. The bottom Ethernet connection must be used.

Using Cortex help files

This manual describes how to upgrade cards using Cortex. When you are using Cortex and require card further instructions, please refer to the Cortex help files (select 'Card' in the menu > select 'Upload Firmware' (the firmware uploading window will open) > press F1).

Precautions

Backup your settings

It is advised to back up the settings before upgrading the card. To do this, select the frame and card you want to upgrade. Then choose “Card” in the menu and select “Backup card”. An exact copy of the card’s menu can be stored as .xml file in the following window. The next image displays the window where this is done.

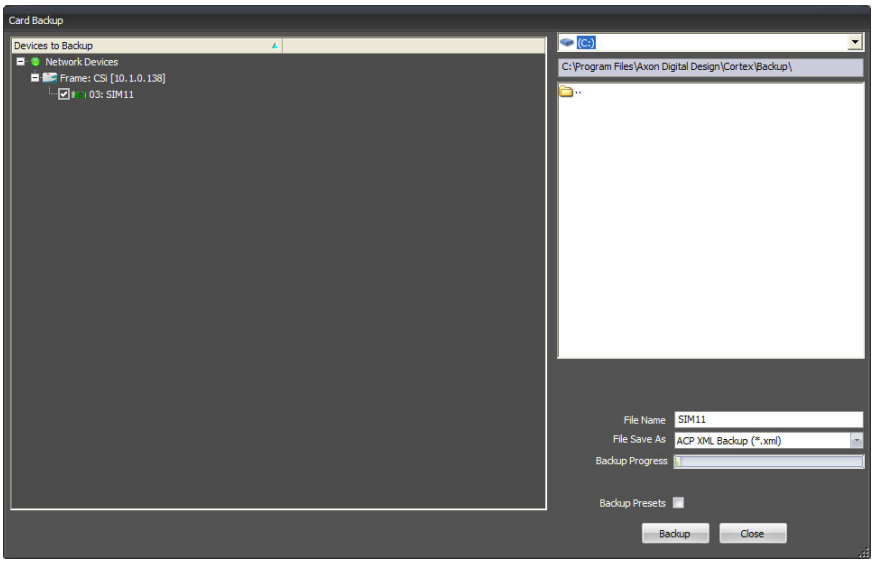

At your own risk

During the upgrade process, the card will stop functioning for a period of time. Make sure the card you are going to upgrade is currently ***not*** being used by anyone in your company.

Note

Use cortex version 1.09.01 or later. This software can be downloaded from https://mi-sftp.evs.com/.

Setting up card

To be able to program the card direct we need to perform two steps. One is setting up of the IP address of the card and second will be making the board recognized as stand alone entity.

To set-up the IP address of the card goto the system view within the Cortex program. Select the HLDxxx and goto the device view tab. Within the device tab you will be able to setup the IP address, netmask and gateway.

The next step is to make the card available as a stand alone card within the system. To add this card you need to go to the network tab at the top of the cortex program. Then go to add network device and choose add ACP device.

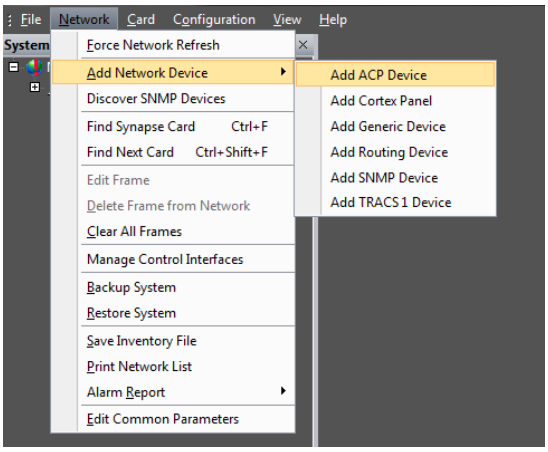

Fill out the name of the card and also the ip address.

Upload firmware

You can start upgrading the card. To do this, click ‘Card’ in the top menu and select ‘Upload Firmware’ from the dropdown box as displayed below.

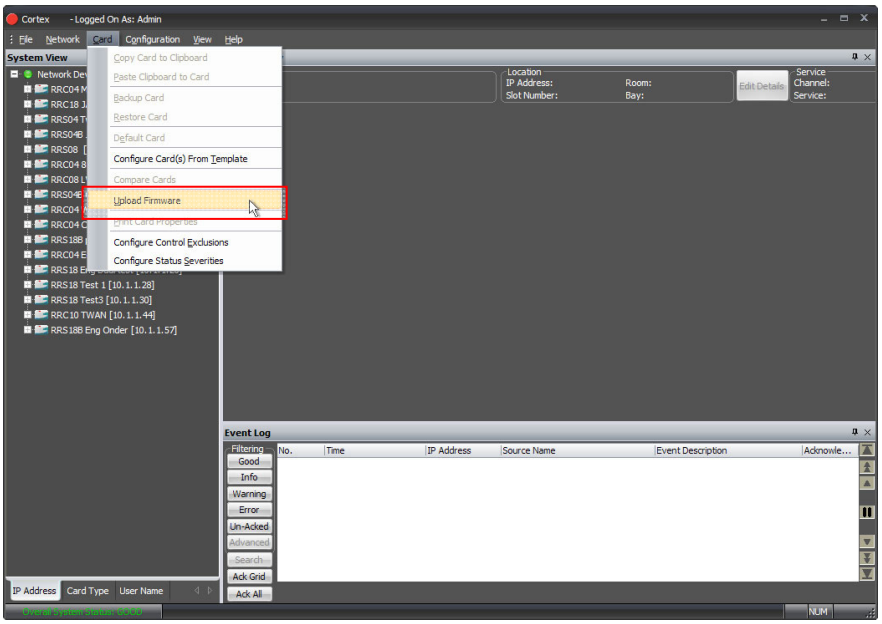

A new window will open, showing you the firmware upload functions. ***At first you must select which .spf file you want to load***. You do this in the buttom dialog as shown below.

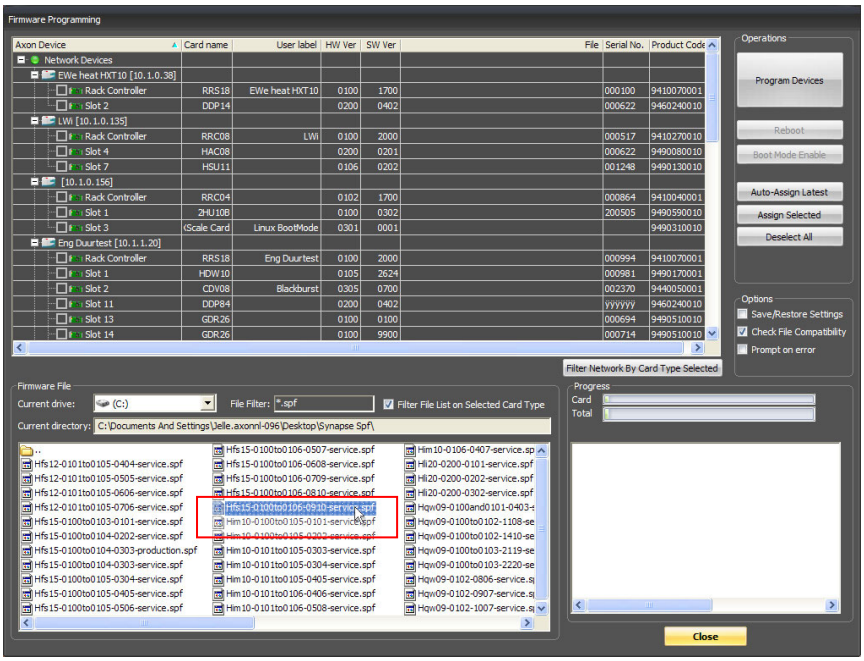

To select which .spf you would like to upload into the card, you click the ‘Current drive’ button and select the folder which holds your .spf files.

When you selected the .spf file, check the card(s) in which you want to load this .spf file. You can load multiple cards with the same .spf file at the same time. When the selected .spf file can not be loaded in the card you try to check an error message will appear in the bottom right box. Selecting a card is done as displayed on the next page.

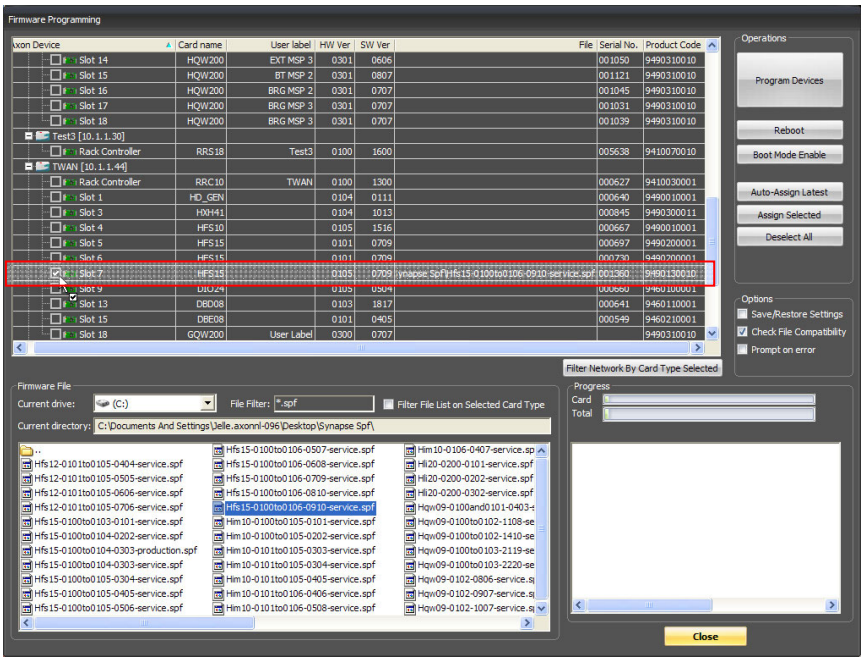

Testing

When all previous instructions have been completed the card should be functioning properly. We advise however to test the card's functionallity before you are going to put it into real on-air use.

This product contains open-source software

This product contains open-source software licensed under the GNU Public License (GPL). A copy of the GNU Public License is included below. Under this license you are eligible to receive a copy of the source code of this software including any changes.

EVS Broadcast Equipment shall provide the source code on request either through physical distribution or electronic communication. For physical distribution you may be charged a fee that covers distribution costs. This offer is valid up to three years after date of purchase. Please direct your request to the support department of EVS Broadcast Equipment.

EVS Broadcast Equipment supports open-source software by participating in the development of open-source projects or submitting improvements to these projects. For more information see ftp://opensource.axon.tv.

GNU Public License version 2

TERMS AND CONDITIONS FOR COPYING, DISTRIBUTION AND MODIFICATION

0. This License applies to any program or other work which contains a notice placed by the copyright holder saying it may be distributed under the terms of this General Public License. The “Program”, below, refers to any such program or work, and a “work based on the Program” means either the Program or any derivative work under copyright law: that is to say, a work containing the Program or a portion of it, either verbatim or with modifi cations and/or translated into another language. (Hereinafter, translation is included without limitation in the term “modifi cation”.) Each licensee is addressed as “you”.

Activities other than copying, distribution and modifi cation are not covered by this License; they are outside its scope. The act of running the Program is not restricted, and the output from the Program is covered only if its contents constitute a work based on the Program (independent of having been made by running the Program). Whether that is true depends on what the Program does.

1. You may copy and distribute verbatim copies of the Program’s source code as you receive it, in any medium, provided that you conspicuously and appropriately publish on each copy an appropriate copyright notice and disclaimer of warranty; keep intact all the notices that refer to this License and to the absence of any warranty; and give any other recipients of the Program a copy of this License along with the Program.

You may charge a fee for the physical act of transferring a copy, and you may at your option offer warranty protection in exchange for a fee.

2. You may modify your copy or copies of the Program or any portion of it, thus forming a work based on the Program, and copy and distribute such modifications or work under the terms of Section 1 above, provided that you also meet all of these conditions:

a) You must cause the modified files to carry prominent notices stating that you changed the fi les and the date of any change.
b) You must cause any work that you distribute or publish, that in whole or in part contains or is derived from the Program or any part thereof, to be licensed as a whole at no charge to all third parties under the terms of this License.
c) If the modified program normally reads commands interactively when run, you must cause it, when started running for such interactive use in the most ordinary way, to print or display an announcement including an appropriate copyright notice and a notice that there is no warranty (or else, saying that you provide a warranty) and that users may redistribute the program under these conditions, and telling the user how to view a copy of this License. (Exception: if the Program itself is interactive but does not normally print such an announcement, your work based on the Program is not required to print an announcement.)

These requirements apply to the modified work as a whole. If identifiable sections of that work are not derived from the Program, and can be reasonably considered independent and separate works in themselves, then this License, and its terms, do not apply to those sections when you distribute them as separate works. But when you distribute the same sections as part of a whole which is a work based on the Program, the distribution of the whole must be on the terms of this License, whose permissions for other licensees extend to the entire whole, and thus to each and every part regardless of who wrote it.

Thus, it is not the intent of this section to claim rights or contest your rights to work written entirely by you; rather, the intent is to exercise the right to control the distribution of derivative or collective works based on the Program.

In addition, mere aggregation of another work not based on the Program with the Program (or with a work based on the Program) on a volume of a storage or distribution medium does not bring the other work under the scope of this License.

3. You may copy and distribute the Program (or a work based on it, under Section 2) in object code or executable form under the terms of Sections 1 and 2 above provided that you also do one of the following:

a) Accompany it with the complete corresponding machine-readable source code, which must be distributed under the terms of Sections 1 and 2 above on a medium customarily used for software interchange; or,

b) Accompany it with a written offer, valid for at least three years, to give any third party, for a charge no more than your cost of physically performing source distribution, a complete machine-readable copy of the corresponding source code, to be distributed under the terms of Sections 1 and 2 above on a medium customarily used for software interchange; or,
c) Accompany it with the information you received as to the offer to distribute corresponding source code. (This alternative is allowed only for noncommercial distribution and only if you received the program in objects code or executable form with such an offer, in accord with Subsection b above.)

The source code for a work means the preferred form of the work for making modifi cations to it. For an executable work, complete source code means all the source code for all modules it contains, plus any associated interface defi nition fi les, plus the scripts used to control compilation and installation of the executable. However, as a special exception, the source code distributed need not include anything that is normally distributed (in either source or binary form) with the major components (compiler, kernel, and so on) of the operating system on which the executable runs, unless that component itself accompanies the executable.

If distribution of executable or object code is made by offering access to copy from a designated place, then offering equivalent access to copy the source code from the same place counts as distribution of the source code, even though third parties are not compelled to copy the source along with the object code.

4. You may not copy, modify, sublicense, or distribute the Program except as expressly provided under this License. Any attempt otherwise to copy, modify, sublicense or distribute the Program is void, and will automatically terminate your rights under this License. However, parties who have received copies, or rights, from you under this License will not have their licenses terminated so long as such parties remain in full compliance.

5. You are not required to accept this License, since you have not signed it. However, nothing else grants you permission to modify or distribute the Program or its derivative works. These actions are prohibited by law if you do not accept this License. Therefore, by modifying or distributing the Program (or any work based on the Program), you indicate your acceptance of this License to do so, and all its terms and conditions for copying, distributing or modifying the Program or works based on it.

6. Each time you redistribute the Program (or any work based on the Program), the recipient automatically receives a license from the original licensor to copy, distribute or modify the Program subject to these terms and conditions. You may not impose any further restrictions on the recipients' exercise of the rights granted herein. You are not responsible for enforcing compliance by third parties to this License.

7. If, as a consequence of a court judgment or allegation of patent infringement or for any other reason (not limited to patent issues), conditions are imposed on you (whether by court order, agreement or otherwise) that contradict the conditions of this License, they do not excuse you from the conditions of this License. If you cannot distribute so as to satisfy simultaneously your obligations under this License and any other pertinent obligations, then as a consequence you may not distribute the Program at all. For example, if a patent license would not permit royalty-free redistribution of the Program by all those who receive copies directly or indirectly through you, then the only way you could satisfy both it and this License would be to refrain entirely from distribution of the Program.

If any portion of this section is held invalid or unenforceable under any particular circumstance, the balance of the section is intended to apply and the section as a whole is intended to apply in other circumstances.

It is not the purpose of this section to induce you to infringe any patents or other property right claims or to contest validity of any such claims; this section has the sole purpose of protecting the integrity of the free software distribution system, which is implemented by public license practices. Many people have made generous contributions to the wide range of software distributed through that system in reliance on consistent application of that system; it is up to the author/donor to decide if he or she is willing to distribute software through any other system and a licensee cannot impose that choice.

This section is intended to make thoroughly clear what is believed to be a consequence of the rest of this License.

8. If the distribution and/or use of the Program is restricted in certain countries either by patents or by copyrighted interfaces, the original copyright holder who places the Program under this License may add an explicit geographical distribution limitation excluding those countries, so that distribution is permitted only in or among countries not thus excluded. In such case, this License incorporates the limitation as if written in the body of this License.

9. The Free Software Foundation may publish revised and/or new versions of the General Public License from time to time. Such new versions will be similar in spirit to the present version, but may differ in detail to address new problems or concerns.

Each version is given a distinguishing version number. If the Program specifies a version number of this License which applies to it and "any later version", you have the option of following the terms and conditions either of that version or of any later version published by the Free Software Foundation. If the Program does not specify a version number of this License, you may choose any version ever published by the Free Software Foundation.

10. If you wish to incorporate parts of the Program into other free programs whose distribution conditions are different, write to the author to ask for permission. For software which is copyrighted by the Free Software Foundation, write to the Free Software Foundation; we sometimes make exceptions for this. Our decision will be guided by the two goals of preserving the free status of all derivatives of our free software and of promoting the sharing and reuse of software generally.

NO WARRANTY

11. BECAUSE THE PROGRAM IS LICENSED FREE OF CHARGE, THERE IS NO WARRANTY FOR THE PROGRAM, TO THE EXTENT PERMITTED BY APPLICABLE LAW. EXCEPT WHEN OTHERWISE STATED IN WRITING THE COPYRIGHT HOLDERS AND/OR OTHER PARTIES PROVIDE THE PROGRAM "AS IS" WITHOUT WARRANTY OF ANY KIND, EITHER EXPRESSED OR IMPLIED, INCLUDING, BUT NOT LIMITED TO, THE IMPLIED WARRANTIES OF MERCHANTABILITY AND FITNESS FOR A PARTICULAR PURPOSE. THE ENTIRE RISK AS TO THE QUALITY AND PERFORMANCE OF THE PROGRAM IS WITH YOU. SHOULD THE PROGRAM PROVE DEFECTIVE, YOU ASSUME THE COST OF ALL NECESSARY SERVICING, REPAIR OR CORRECTION.

12. IN NO EVENT UNLESS REQUIRED BY APPLICABLE LAW OR AGREED TO IN WRITING WILL ANY COPYRIGHT HOLDER, OR ANY OTHER PARTY WHO MAY MODIFY AND/OR REDISTRIBUTE THE PROGRAM AS PERMITTED ABOVE, BE LIABLE TO YOU FOR DAMAGES, INCLUDING ANY GENERAL, SPECIAL, INCIDENTAL OR CONSEQUENTIAL DAMAGES ARISING OUT OF THE USE OR INABILITY TO USE THE PROGRAM (INCLUDING BUT NOT LIMITED TO LOSS OF DATA OR DATA BEING RENDERED INACCURATE OR LOSSES SUSTAINED BY YOU OR THIRD PARTIES OR A FAILURE OF THE PROGRAM TO OPERATE WITH ANY OTHER PROGRAMS), EVEN IF SUCH HOLDER OR OTHER PARTY HAS BEEN ADVISED OF THE POSSIBILITY OF SUCH DAMAGES.

Corporate
+32 4 361 7000

North & Latin America
+1 973 575 7811

Asia & Pacific
+852 2914 2501

Other regional offices
www.evs.com/contact

EVS Headquarters
Liège Science Park
13, rue Bois St Jean
B-4102 Seraing
Belgium

To learn more about EVS go to **www.evs.com**