Synapse

INS400

VBI line inserter/swapper (data bridge) for composite and SDI inputs

Installation and Operation manual

Committed.

AXON®

Synapse

TECHNICAL MANUAL

INS400

VBI line inserter/swapper (data bridge) for composite and SDI inputs

Lange Wagenstraat 55

NL-5126 BB Gilze

The Netherlands

Phone: +31 161 850 450

Fax: +31 161 850 499

E-mail: Info@axon.tv

Web: www.axon.tv

WARNING: TO REDUCE THE RISK OF FIRE OR ELECTRICAL SHOCK, DO NOT EXPOSE THIS APPLIANCE TO RAIN OR MOISTURE

● ALWAYS disconnect your entire system from the AC mains before cleaning any component. The product frame (SFR18 or SFR04) must be terminated with three-conductor AC mains power cord that includes an earth ground connection. To prevent shock hazard, all three connections must always be used.
● NEVER use flammable or combustible chemicals for cleaning components.
● NEVER operate this product if any cover is removed.
● NEVER wet the inside of this product with any liquid.
● NEVER pour or spill liquids directly onto this unit.
● NEVER block airflow through ventilation slots.
● NEVER bypass any fuse.
● NEVER replace any fuse with a value or type other than those specified.
● NEVER attempt to repair this product. If a problem occurs, contact your local Axon distributor.
● NEVER expose this product to extremely high or low temperatures.
● NEVER operate this product in an explosive atmosphere.

Warranty: Axon warrants their products according to the warranty policy as described in the general terms. That means that Axon Digital Design BV can only warrant the products as long as the serial numbers are not removed.

Date created: 18-06-2009
Date last revised: 22-09-2014

This product complies with the requirements of the product family standards for audio, video, audio-visual entertainment lighting control apparatus for professional use as mentioned below.

CE	EN60950	Safety
	EN55103-1: 1996	Emission
	EN55103-2: 1996	Immunity

Axon Digital Design INS400 FC Tested To Comply With FCC Standards FOR HOME OR OFFICE USE	This device complies with part 15 of the FCC Rules Operation is subject to the following two conditions: (1) This device may cause harmful interference, and (2) This device must accept any interference received, including interference that may cause undesired operation.

Table of Contents

1 Introduction to Synapse

An Introduction to Synapse

Synapse is a modular system designed for the broadcast industry. High density, intuitive operation and high quality processing are key features of this system. Synapse offers a full range of converters and processing modules. Please visit the AXON Digital Design Website at www.axon.tv to obtain the latest information on our new products and updates.

Local Control Panel

The local control panel gives access to all adjustable parameters and provides status information for any of the cards in the Synapse frame, including the Synapse rack controller. The local control panel is also used to back-up and restore card settings. Please refer to the RRC18, RRC10, RRC04, RRS18 and RRS04 manuals for a detailed description of the local control panel, the way to set-up remote control over IP and for frame related settings and status information.

Remote Control Capabilities

The remote control options are explained in the rack controller manual. The method of connection to a computer using Ethernet is also described in the RRC/RRS manual.

!

CHECK-OUT: "SYNAPSE CORTEX" SOFTWARE WILL INCREASE SYSTEM FLEXIBILITY OF ONE OR MORE SYNAPSE FRAMES

Although not required to use Cortex with a Synapse frame, you are strongly advised to use a remote personal computer or laptop PC with the Synapse Cortex software as this increases the ease of use and understanding of the modules.

2 Unpacking and Placement

Unpacking

The Axon Synapse card must be unpacked in an anti-static environment. Care must be taken NOT to touch components on the card – always handle the card carefully by the edges. The card must be stored and shipped in anti-static packaging. Ensuring that these precautions are followed will prevent premature failure from components mounted on the board.

Locating the card

The Synapse card can be placed vertically in an SFR18 frame or horizontally in an SFR04 or SFR08 frame. Locate the two guide slots to be used, slide in the mounted circuit board, and push it firmly to locate the connectors.

Correct insertion of card is essential as a card that is not located properly may show valid indicators, but does not function correctly.

REMARK: On power up all LEDs will light for a few seconds, this is the time it takes to initialise the card.

3 A Quick Start

When Powering-up

On powering up the Synapse frame, the card set will use basic data and default initialisation settings. All LEDs will light during this process. After initialisation, several LEDs will remain lit – the exact number and configuration is dependant upon the number of inputs connected and the status of the inputs.

Default settings

In its default condition, the INS400 will act as a VBI inserter, inserting data that is placed in the VBI of a analog or SDI video source into an SDI signal. For example this data could be Teletext.

Changing settings and parameters

The front panel controls or Synapse Cortex can be used to change settings. An overview of the settings can be found in chapter 5, 6 and 7 of this manual.

Front Panel Control

Front Panel Display and Cursor

```
[No Alarms]
```

Settings are displayed and changed as follows;

Use the cursor ‘arrows’ on the front panel to select the menu and parameter to be displayed and/or changed.

Press ►	To go forward through the menu structure.
Press ◄	To go back through the menu structure.
Press ▲	To move up within a menu or increase the value of a parameter.
Press ▼	To move down through a menu or decrease th□ value of a parameter.

REMARK: Whilst editing a setting, pressing ► twice will reset the value to its default.

Example of changing parameters using front panel control

With the display as shown below

```
RRC18 [Select Card]
>S01=SFS10
```

Pressing the ► selects the `SFS10` in frame slot 01.

The display changes to indicate that the SFS10 has been selected. In this example the `Settings` menu item is indicated.

```
SFS10 [Select Menu]
>Settings
```

Pressing the ► selects the menu item shown, in this example `Settings`.

(Pressing ▲ or ▼ will change to a different menu eg `Status, Events`).

The display changes to indicate that the SFS10 `Settings` menu item `SDI-Format` has been selected and shows that it current setting is `Auto`.

```
SFS10 [Settings]
>SDI-Format=Auto
```

Pressing the ► selects the settings item shown, in this example `SDI-Format.`

(Pressing ▲ or ▼ will change to a different setting, eg `Mode, H-Delay`).

The display changes to indicate that the SFS10 `Edit Setting` menu item `SDI-Format` has been selected.

```
SFS10 [Edit
Setting]
```

To edit the setting of the menu item press ▲ or ▼.

All menu items can be monitored and/or changed in this way. Changing a setting has an immediate effect.

Synapse Cortex

Synapse Cortex can be used to change the settings of Synapse modules from a PC, either locally or remotely. The software enables communication based on TCP/IP between the Cortex PC and Synapse frames/modules.

Each Synapse frame is addressed through its rack controller's unique IP address, giving access to each module, its menus and adjustment items. Cortex has access to data contained within the Synapse module and displays it on a GUI. The software has an intuitive structure following that of the module that it is controlling.

For operation of Cortex, please refer to the Cortex help files.

Menu Structure Example

Slot	Module		Item		Parameter		Setting
▲							
▲							
S02			Identity				
▲			▲				
S01	SFS10	►	Settings	►	SDI-Format	►	Auto
▼			▼		▼		▼
S00	RRC18		Status		Mode		625
			▼		▼		▼
			Events		Ref-Input		525
					▼		
					H-Delay		
					▼		
					▼		

REMARK: Further information about Front Panel Control and Cortex can be obtained from the rack controller manuals and Cortex help files.

Quick start for data-bridge use

To reset the card into bridging all lines from either the SDI or CVBS input, use these two simple steps.

1. Set 'All_Lines' to 'On'. This resets all #Src-Ins-Ln to the corresponding Ins-Ln.
2. Set either 'All_Clone_Ana' or 'All_Clone_SDI2' to 'On'. This selects either the SDI or CVBS input to be the source of all of these lines.

This is needed because the factory default settings for the #Ins-Ln, #Src-Ins-Ln items are not optimal for the most common data-bridge use.
If you don't follow this procedure, you would have to manually select a source and line for each line to insert.

4 The INS400 Card

Introduction

The INS400 is a vertical interval (Vertical Blanking) inserter with composite and SDI inputs and an SDI input and output. VBI (for example Teletext) information present in the composite or SDI signal can be inserted into the main SDI signal. The INS400 can insert any composite or SDI line between line 7 – 22 and line 320 – 335 from both composite and SDI domain into any line between line 7 – 22 and line 320 – 335 in the SDI domain. For example, line 7 of the CVBS input can be inserted into line 335 of the SDI signal.

This line exchange is transparent to embedded audio that might be present in the SDI domain.

Features

- Takes any line between 7 and 22 of Field 1 and any line between line 320 and 335 of field 2 of the composite or SDI input and inserts it any line between 7 and 22 of Field 1 and any line between line 320 and 335 of field 2 of the SDI domain
- Lines can be swapped, blanked or set transparent.
- Built-in proc-amp
- VI and WSS insertion
- 4 processed outputs
- Full control and status monitoring through the front panel of the SFR04/SFR08/SFR18 frame and the Ethernet port (ACP)
- Optional 1 fiber input (replacing 1 SDI input) or 1 fiber output (replacing 1 SDI output) on I/O panel
- Optional 1 CVBS output (replacing 1 SDI output) on I/O panel

Applications

Generic data bridge application where composite domain vertical blanking lines are inserted in the SDI domain

5 Settings Menu

Introduction

The settings menu displays the current state of each setting within the INS400 and enables the item to be changed or adjusted.

Settings can be changed using the front panel of the Synapse frame (SFR18, SFR08 or SFR04) or Cortex.

Please refer to chapter 3 for information on the Synapse front panel control and Cortex.

SDI_Format

This item lets you select the SDI input format of the card. This can be one of the following:

- `SD625`
- `SD525`
- `Auto` (automatic detection)

By default it is set to `Auto`.

SDI2_Inp_Mod

This item allows you to process the teletext or VBI signal present on the SDI input 2 synchronous or asynchronous with respect to SDI input 1.

- `sync`
- `async`

By default it is set to `sync`

CVBS_Inp_Mod

This item allows you to process the teletext or VBI signal present on the CVBS input synchronous or asynchronous with respect to SDI input 1.

- `sync`
- `async`

By default it is set to `sync`

Ins_Ln-625-F1

In this menu item you select which output line of field 1 you want to edit. This works in a preset way. When you select an output line using this item you will see what functions will be performed on that line in the menu-item `#Ins-Fn-625-F1`, and which source line should be used in the menu item `#Src-Ln-625-F1` for SD625 formats.

You can choose line 7 till line 22 to edit.

#Ins-Fn-625-F1

This item you can select what the action the INS400 perform on the with `Ins-Ln-625-F1` selected line of the first field for SD625 formats. Choose between:

- `Transparent` (copy the data from SDI input 1)
- `Clear` (delete the data)
- `Clone Analog` (copy the data from the lines as they are in the analog input)
- `Clone SDI2` (copy the data from the lines as they are in the second SDI input)

#Src-Ln-625-F1

With this item you can select which source line of the chosen input (analog or SDI2, done with `#Ins-Fn-625-F1` setting) should be copied to the `Ins-Ln-625-F1` selected line for SD625 formats..

Ins_Ln-525-F1

In this menu item you select which output line of field 1 you want to edit in SD525 formats. This works in a preset way. When you select an output line using this item you will see what functions will be performed on that line in the menu-item `#Ins-Fn-525-F1`, and which source line should be used in the menu item `#Src-Ln-525-F1` for SD525 formats.

You can choose line 11 till line 21 to edit.

#Ins-Fn-525-F1

This item you can select what the action the INS400 perform on the with `Ins-Ln-525-F1` selected line of the first field in SD525 formats. Choose between:

- `Transparent` (copy the data from SDI input 1)
- `Clear` (delete the data)
- `Clone Analog` (copy the data from the lines as they are in the analog input)
- `Clone SDI2` (copy the data from the lines as they are in the second SDI input)

#Src-Ln-525-F1

With this item you can select which source line of the chosen input (analog or SDI2, done with `#Ins-Fn-525-F1` setting) should be copied to the `Ins-Ln-525-F1` selected line for SD525 formats..

End_VBI_F1

With this setting you can set where the end of the VBI lines is of field 1 of the CVBS input. You can set it to the normal position, or to -1 line.

Ins-Fn-625-23

WSS data may be present in line 23. You can `clear` this line, make it `transparent` or copy line 23 out of the `Analog` or `SDI2` input.

Ins_Ln-625-F2

In this menu item you select which output line of field 2 you want to edit for SD625 formats. This works in a preset way. When you select an output line using this item you will see what functions will be performed on that line in the menu-item `#Ins-Fn-625-F2`, and which source line should be used in the menu item `#Src-Ln-625-F2`.

You can choose line 320 till line 335 to edit.

#Ins-Fn-625-F2

This item you can select what the action the INS400 perform on the with `Ins-Ln-625-F2` selected line of the second field for SD625 formats. Choose between:

- `Transparent` (copy the data from SDI input 1)
- `Clear` (delete the data)
- `Clone Analog` (copy the data from the lines as they are in the analog input)
- `Clone SDI2` (copy the data from the lines as they are in the second SDI input)

#Src-Ln-625-F2

With this item you can select which source line of the chosen input (analog or SDI2, done with `#Ins-Fn-625-F2` setting) should be copied to the `Ins-Ln-625-F2` selected line for SD625 formats.

Ins_Ln-525-F2

In this menu item you select which output line of field 2 you want to edit for SD525 formats. This works in a preset way. When you select an output line using this item you will see what functions will be performed on that line in the menu-item `#Ins-Fn-525-F2`, and which source line should be used in the menu item `#Src-Ln-525-F2`.

You can choose line 274 till line 284 to edit.

#Ins-Fn-525-F2

This item you can select what the action the INS400 perform on the with `Ins-Ln-525-F2` selected line of the second field for SD525 formats. Choose between:

- `Transparent` (copy the data from SDI input 1)
- `Clear` (delete the data)
- `Clone Analog` (copy the data from the lines as they are in the analog input)
- `Clone SDI2` (copy the data from the lines as they are in the second SDI input)

#Src-Ln-525-F2	With this item you can select which source line of the chosen input (analog or SDI2, done with `#Ins-Fn-525-F2` setting) should be copied to the `Ins-Ln-525-F2` selected line for SD525 formats.
End_VBI_F2	With this setting you can set where the end of the VBI lines is of field 2 of the CVBS input. You can set it to the normal position, or to -1 line.
WST-EC-status	Enables or disables various error counters in the status menu, namely the following: ▪ Pkt0-Par-EC ▪ Pkt31-CRC-EC ▪ WST-MagRow-EC Can be set to `On` or `Off`. By default set to `Off`.
Chroma-Pass	If this setting is set to '`On`' the chrominance at the VBI lines of the SDI input is passed through to the output. The settings are `On` or `Off`. The default setting is `Off`.
VI-Pass	If this setting is set to '`On`' the chroma information on line 11 (like VI information) of the SDI input is passed through to the output. This is independent of settings: chroma_blank, and F1 line 11 settings. Default is `Off`.

VIDEO PROC

Y-Black	This item controls the Luminance black level adjustment between -128……..+127bits The black level can be aligned by +/– 100mV(analog video). The default setting is `0 bit`.
Cr-Black	This item controls the Colour Difference (Cr) black level adjustment. The default setting is `0 bit`
Cb-Black	This item controls the Colour Difference (Cb) black level adjustment. The default setting is `0 bit`
Y-Gain	`Y-Gain` controls the Luminance gain of the built-in processing amplifier. The control range is between `0%` and `150%`. The default setting is `100%`.

Cr-Gain	`Cr-Gain` controls the Colour Difference gain of the built-in processing amplifier. The control range is between `0%` and `150%`. The default setting is `100%`.
Cb-Gain	`Cb-Gain` controls the Colour Difference gain of the built-in processing amplifier. The control range is between `0%` and `150%`. The default setting is `100%`.

MISC

All_Clone_Ana	When set to `on`: `#Ins-Fn-625-F1`, `#Ins-Fn-625-F2`, `#Ins-Fn-525-F1` and `#Ins-Fn-525-F2` are all set to `Clone Analog`.
All_Clone_SDI2	When set to `on`: `#Ins-Fn-625-F1`, `#Ins-Fn-625-F2`, `#Ins-Fn-525-F1` and `#Ins-Fn-525-F2` are all set to `SDI2`.
All_Transparent	When set to `on`: `#Ins-Fn-625-F1`, `#Ins-Fn-625-F2`, `#Ins-Fn-525-F1` and `#Ins-Fn-525-F2` are all set to `Transparent`.
All_Clear	When set to `on`: `#Ins-Fn-625-F1`, `#Ins-Fn-625-F2`, `#Ins-Fn-525-F1` and `#Ins-Fn-525-F2` are all set to `Clear`.
All_Lines	When set to on: All linked line settings (for instance `#Ins-Ln-625-F1` and `#Src-Ln-625-F1`) are set to match each other. This is done for ***all presets***!

Control

The `Control` menu item determines how the VI and WSS inserter of the INS400 is controlled. The settings of `Control` are:

- `Manual`
- `VI1`, `VI2` or `VI3`: Video index of input 1, 2 or 3.
- `WSS-std1`, `WSS-std2` or `WSS-std3`: standard widescreen signalling of input 1, 2 or 3.
- `WSS-ext1`, `WSS-ext2` or `WSS-ext3`: extended widescreen signalling of input 1, 2 or 3
- `GPI-priori`: when the local GPI input is used, GPI contact_1 is routed to `Preset_1`, GPI contact_2 is routed to `Preset_2`, up to GPI contact_4+5 routed to `Preset_8`. See GPI-priority table.
- `GPI-prio-lvl`: when the local GPI input is used, GPI contact_1 is routed to `Preset_1`, GPI contact_2 is routed to `Preset_2`, up to GPI contact_4+5 routed to `Preset_8`. See GPI-priority table. When no contacts are closed the 'no-control' preset is selected.

- `GPI-binary:` sets the presets by using the local GPI-contacts in a binary way (See table below).
- `GPI-take:` Sets the presets by using the local GPI-contacts in a binary way (See table below), not triggered until a take-pulse (GPI 5) is given. The take pulse should last at least 101 us. After the GPI take pin has been low for at least 101 us, a take event is generated and the AFD encoded on GPI 1 to 4 is copied. The AFD should be kept on the GPI's for at least 1 ms after the take pulse to let the software handle it correctly.
- `GPI-Slave`: if used in combination with GPI16 card

The following table gives the preset selection when `Control` is set to `Video Index` or `WSS-ext`:

Incoming Format	Preset Selection
4:3_0	1
4:3_1	2
4:3_2	3
4:3_3	4
4:3_4	5
4:3_5	6
4:3_6	7
4:3_7	8
16:9_0	9
16:9_1	10
16:9_2	11
16:9_3	12
16:9_4	13
16:9_5	14
16:9_6	15
16:9_7	16

The following table gives the preset selection when `Control` is set to `WSS-std`:

Incoming Standard	Preset Selection
1_vid	1
2_vid	2
3_vid	3
4_vid	4
5_vid	5
6_vid	6
7_vid	7
8_vid	8
1_flm	9
2_flm	10
3_flm	11
4_flm	12
5_flm	13
6_flm	14
7_flm	15
8_flm	16

`GPI_binary` table

Select Preset	Gpi_1 contact	Gpi_2 contact	Gpi_3 contact	Gpi_4 contact
Preset_1	open	open	open	open
Preset_2	closed	open	open	open
Preset_3	open	closed	open	open
Preset_4	closed	closed	open	open
Preset_5	open	open	closed	open
Preset_6	closed	open	closed	open
Preset_7	open	closed	closed	open
Preset_8	closed	closed	closed	open
Preset_9	open	open	open	closed
Preset_10	closed	open	open	closed
Preset_11	open	closed	open	closed
Preset_12	closed	closed	open	closed
Preset_13	open	open	closed	closed
Preset_14	closed	open	closed	closed
Preset_15	open	closed	closed	closed
Preset_16	closed	closed	closed	closed

`GPI_priority/GPI-prio-lvl` table:
(0 = open, 1 = closed, X = don't care)
Contact number (GPI#)

5	4	3	2	1	
0	0	0	0	0	Hold previous / set "no-control"
0	0	0	0	1	Preset 1
0	0	0	1	X	Preset 2
0	0	1	X	X	Preset 3
0	1	X	X	X	Preset 4
1	0	0	0	1	Preset 5
1	0	0	1	X	Preset 6
1	0	1	X	X	Preset 7
1	1	X	X	X	Preset 8

No-Control

The `No-Control` item allows you, when no VI or WSS data is present, to switch back to a selectable preset value. Any of the 16 presets can be selected. Can also be set to `Hold`, in which case the last active preset is held active. `Hold` is default.

No-Control-cnt

This sets the threshold of when the card detects a 'No-control' situation (the amount of time of no VI or WSS values, until the `No-Control` preset is activated). Can be any duration between 0 and 255 frames.

Active-Preset

Here you can manually change the active preset. Any of 16 presets can be selected. Can only be used when `Control` is set to `manual`! All setting preceded with a "#" prefix are part of the preset.

#Preset-Name

This field only functions as a mnemonic of the active preset. You can name it with a length of 16 characters.

#VI-Insert

This setting switches `On` or `Off` Video Index insertion. Can also be set to Blank in which case the original VI data is blanked and nothing is inserted. Off is default.

#VI-Data

When the above setting is set to On, this setting decides which VI data is inserted. Can be `4:3_0` till `4:3_7` or `16:9_0` till `16:9_7`. `4:3_0` is default.

#WSS-Insert

This setting switches on or off WSS insertion. You can select whether you want to insert `standard` WSS or `extended` WSS. Can also be set to blank in which case the original WSS data is blanked and nothing in inserted. Default is off.

#WSS-Stnd

When the `#WSS-Insert` setting is set to `Standard`. This setting sets which WSS value should be inserted. Can be `1_vid` till `8_vid` or `1_flm` till `8_flm`. Default is `1_vid`.

#ColourCoding

This WSS bit is only for PALplus. It can be set to `Standard` or `MotionAdapt`.

#Helper

Sets the WSS helper bit to `No-Helper` or `Modulated`. Should only be set when the aspect ratio is either `16:9_LC` or `GT16:9_LC` and the number of lines is ≤ 430 lines. This bit is for PALplus only.

#Teletext	Sets the WSS Teletext bit. Can be set to `No-Subtitles` (subtitles within Teletext) or `Subtitles` (subtitles within Teletext).
#Open-Titles	This sets the Open-Titles bit in the WSS signal. The bit is used to indicate whether or not subtitles should be displayed in the black bars of a letterboxed image or not. Can be set `to In-Active-Img` (subtitles are on the active image, not on the black bars), `Out-Active-Img` (subtitles are displayed on the black bars) or to `No-Subtitles` (subtitles won't be displayed).
#Surround	Sets the Surround bit in the WSS signal, indicating whether or not there's surround sound.
#CopyRght-Assert	Sets the Copyright information bit in the WSS signal. Can be switched on or off.
#CopyRght-Rstrct	Sets the copy restriction bit in the WSS signal. Can be switched on or off.
#WSS-Extnd	When the `#WSS-Insert` setting is set to `Extended` this setting sets which WSS value should be inserted. Can be `4:3_0` till `4:3_7` or `16:9_0` till `16:9_7`. `4:3_0` is default.
#WSS-GPI-Ins	`#WSS-GPI-Ins` is activated if `Extended` is selected in the setting menu item `#WSS-Insert`. The `#WSS-GPI-Ins` setting sets the programmable GPIs that are supported by WSS. selection of 4 GPI can be made: _____, ____4, 1__4. 12_4 etc to1234. The default setting is _____.
#GPI-Out-Slv	The menu item `#GPI-Out-Slv` selects which GPI outputs of the slave GPI16 card are used. The available GPI outputs can be set between `#1` to `#16`. The default setting is `#1`.
GPI_Out1_Lcl	This setting controls the local GPI outputs. The user is able to relay several signals to the outputs: ▪ `Off`: No information is passed to the GPI outputs. ▪ `AFD_b0` to `AFD_b3`: Either of the AFD Bits 0 to 3 of the incoming WSS standard or WSS extended signal may be set to GPI output 1. ▪ `WSSGPI_b0` to `WSSGPI_b3`: Either of the WSS GPI bits 0 to 3 of the incoming WSS extended signal may be set to GPI output 1.

- `1hotGPI`: Bits 0 through 3 of the WSS extended GPI information are encoded to 2 outputs. When the user sets either *GPI output-local-1* or *GPI output-local-2* to 1hotGPI, the other *GPI output-local-1* or *GPI output-local-2* setting jumps to **1hotGPI** as well. When the GPI information bits 0 through 3 are one-hot encoded (i.e. "0001", "0010","0100" or "1000"), this information may be encoded to 2 bits ("00", "01", "10" or "11") on the GPI output. When GPI bits are not one-hot encoded (i.e. "0011"), "00" will be set on the GPI output's.
- `CpySlave`: Bit 0 of the slave input on the Axon Synapse bus is set to the GPI output.
- `CpyLocal`: Input 1 of the local GPI contacts is set to the GPI output.
- `CpySlvOut`: The GPI output follows the general purpose output bit 0 to the Axon Synapse bus (Default).

GPI_Out2_Lcl

Same as `GPI_Out1_Lcl`, but in `CpySlave` bit 1 is set to the GPI output. Hence `CpyLocal` outputs input 2 of the local GPI contacts. In `CpySlvOut` the GPI output follows the general purpose output bit 1 to the Axon Synapse bus.

BYPASS

Bypass-Input

When set to `SDI-1`, the SDI-1 embedded WST or OP47 pass when the WST on `Bridge_Inputs` fail. When set to `Bridge_Inputs`, the `Bridge_Inputs` will be used as source if the `SDI-1` embedded WST or OP47 fails. Default is `Bridge_Inputs`.

Bypass-Timeout

This sets a delay time before the Bypass (set with `Bypass-Input`) is enabled. If the fail is shorter than the here set time, the Bypass will not be enabled. Can be set between 1 and 120 seconds. Default is 1 second. This setting will only be used when `Bypass-timer` is set to `On`.

Bypass-timer

Set to `off`, the WST or OP47 will be processed normally, without bypass. When set to `on`, it will use the timeout setting, set with `Bypass-Timeout`. Default is `off`.

NETWORK

IP_Conf0

With this setting you can let the card obtain an IP address automatically via `DHCP`, or appoint a `manual` set IP address. By default this setting is set to `Manual`.

mIP0

When `IP_Conf0` is set to `manual`, you can type in the preferred IP address here. By default it is set to 172.16.1.2

mNM0

With `IP_Conf0` set to `manual`, with this setting you can set a Netmask. Default is 255.255.0.0

mGW0

With `IP_Conf0` set to `manual`, this setting let you set a Standard Gateway. Default is set to 172.16.0.1

NetwPrefix0

This item sets the network prefix with `IP_conf0` set to `manual`. Can be set between `0` and `30` bit. By default it is set to `0` bit

6 Status Menu

Introduction

The status menu indicates the current status of each item listed below.

sInp1

This status item indicates the presence and format of a valid signal in input 1. This is displayed as:

- `1080i60`
- `1080i50`
- `1080p30`
- `1080p25`
- `1080p24`
- `1035i60`
- `720p60`
- `720p50`
- `720p30`
- `720p25`
- `720p24`
- `SD525`
- `SD625`
- `NA`

sInp2

This status item indicates the presence and format of a valid signal in input 2. This is displayed as listed under `sInp1`.

sInp3

This status item indicates the presence and format of a valid signal in input 3 (the analog input). This is displayed as listed under `sInp1`.

sInpCVBS

This status item indicates the detected input format on the CVBS input. This is displayed as one of the following values:

- `NTSC-J`
- `NTSC-M`
- `NTSC-4.43`
- `PAL-BGHID`
- `PAL-N`
- `PAL-M`
- `PAL-60`
- `SECAM`
- `SECAM-525`

`NA` (no input detected)

EDH-Stat

EDH-Stat gives the status of the incoming SDI signal EDH. Can be EDH-`Error` (EDH-errors detected) or `OK` (no EDH-errors are detected).

WST-det	Displays the WST status that has been detected. Can be NA (if no WST found), OK, Level-Low (low level DC-offset detected) or Level-High (high level SC-offset detected).
WST-MagRow-EC	This item displays the error count of WST Magazine row errors. Can Become and maximum of 255 errors.
Pkt31-CRC-EC	This item displays the error count of packet-31 CRC errors. Can Become and maximum of 255 errors.
Pkt0-Par-EC	This item displays the error count of packet-0 parity errors. Can Become and maximum of 255 errors after which it will reset to 0.
Preset-A	This status item displays the current active preset.
sInp1_VI ~ sInp3_VI	Displays the current Video index in input 1 till input 3. Can be 4:3_0 till 4:3_7 or 16:9_0 till 16:9_7. When no VI is detected, this is indicated by NA.
sInp1_WSS-Stnd ~ sInp3_WSS-Stnd	Displays the current standard WSS value in input 1 till input 3. Can be 1_vid till 7_vid or 1_flm till 7_flm. When no standard WSS is detected, this is indicated by NA.
sInp1_WSS-Extd ~ sInp3_WSS-Extd	Displays the current extended WSS value in input 1 till input 3. Can be 4:3_0 till 4:3_7 or 16:9_0 till 16:9_7. When no extended WSS is detected, this is indicated by NA.
sInp1_WSS-GPI ~ sInp3_WSS-GPI	Displays the detected programmable GPIs that are supported by WSS, in inputs 1 till 3. Selection of 4 GPI can be displayed: _____, ___4, 1__4. 12_4 etc to1234.
GPI_In_Local	Displays the current local GPI value.
GPI_In_Slave	Displays the current GPI value coming from the GPI16 card.

Network

IP_Addr0	This item displays the status of the IP address. It can be manual, DHCP asking, DHCP Leased or DHCP Infin.

IP0	This item displays the current IP address of the card.
MAC0	This item displays the MAC address of the card.
NM0	This item displays the current Netmask of the card.
GW0	This item displays the current Standard Gateway of the card.

7 Events Menu

Introduction

An event is a special message that is generated on the card asynchronously. This means that it is not the response to a request to the card, but a spontaneous message.

What is the Goal of an event?

The goal of events is to inform the environment about a changing condition on the card. A message may be broadcast to mark the change in status. The message is volatile and cannot be retrieved from the system after it has been broadcast. There are several means by which the message can be filtered.

Events

The events reported by the INS400 are as follows;

Announcements

Announcements is not an event. This item is only used for switching the announcement of status changes on/off. 0=off, other =on

Input

Input can be selected between 0 .. 255. 0= no event, 1..255 are the priority setting. If set to `0` no events will be generated. If the input is lost an Event will be generated at the priority.

EDH-Status

EDH status can be selected between 0 .. 255. 0= no event, 1..255 is the priority setting.

What information is available in an event?

The message consists of the following items;

1) A message string to show what has happened in text, for example: “INP_LOSS”, “REF_LOSS”, “INP_RETURN”.
2) A tag that also shows what happens, but with a predefined number: e.g. 1 (= loss of input), 2 (= loss of reference), 129(= 1+128 = return of input). For a list of these predefined tags see the table on the next page.
3) A priority that marks the importance of an event. This value is defined by the user and can have any value between 1 and 255, or 0 when disabled.
4) A slot number of the source of this event.

The Message String

The message string is defined in the card and is therefore fixed. It may be used in controlling software like Synapse Set-up to show the event.

The Tag

The tag is also defined in the card. The tag has a fixed meaning. When controlling or monitoring software should make decisions based on events, it is easier to use the tag instead of interpreting a string. The first implementation is the tag controlled switch in the GPI16.

In cases where the event marks a change to fault status (e.g. 1 for Loss of Input) the complement is marked by the tag increased by 128 (80_{hex}) (e.g. 129 (81_{hex}) for Return of Input).

Defining Tags

The tags defined for the INS400 are:

Event Menu Item	Tag		Description
Announcements	0 or NA	0 or NA	Announcing of report and control values
Input1	01_{hex}=INP1_LOSS	81_{hex}=INP1_RETURN	Input1 lost or returned
Input2	12_{hex}=INP2_LOSS	92_{hex}=INP2_RETURN	Input2 lost or returned
Input3	13_{hex}=INP3_LOSS	93_{hex}=INP3_RETURN	Input3 lost or returned
EDH-Status	03_{hex}=EDH_ERROR	83_{hex}=EDH_OK	EDH error occurred

The Priority

The priority is a user-defined value. The higher the priority of the alarm, the higher this value. Setting the priority to Zero disables the announcement of this alarm. Alarms with priorities equal or higher than the Error Threshold setting of the RRC will cause the error LED on the Synapse rack front panel to light.

The Address

Together with the message string or the tag, the slot number or address of the card is relevant to be able to assign the event to a certain card.

8 LED Indication

Error LED

The error LED indicates an error if the internal logic of the INS400 card is not configured correctly or has a hardware failure.

Input_1 LED

This LED indicated the presence of a valid SDI video signal on input 1.

Input_2 LED

This LED indicated the presence of a valid SDI video signal on input 2.

ANC Data LED

Indicates the presence of ancillary data within the input signal.

Data Error LED

This LED indicates a CRC error.

Connection LED

This LED illuminates after the card has initialized. The LED lights for 0.5 seconds every time a connection is made to the card.

Error LED

The error LED indicates an error if the internal logic of the INS400 card is not configured correctly or has a hardware failure.

9 Block Schematic

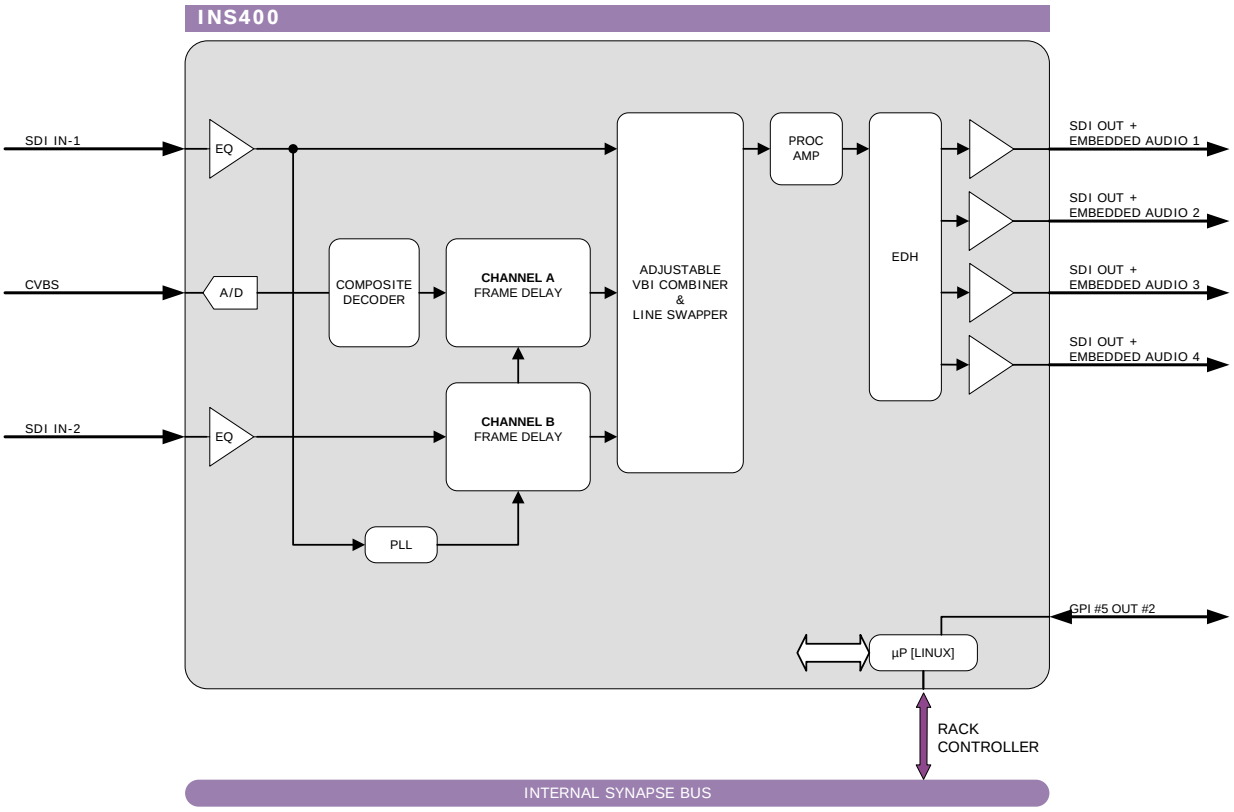

10 Connector Panels

The INS400 can be used with the BPH17 or the BHX17b. The following table displays the pinout of these backpanels in combination with the INS400.

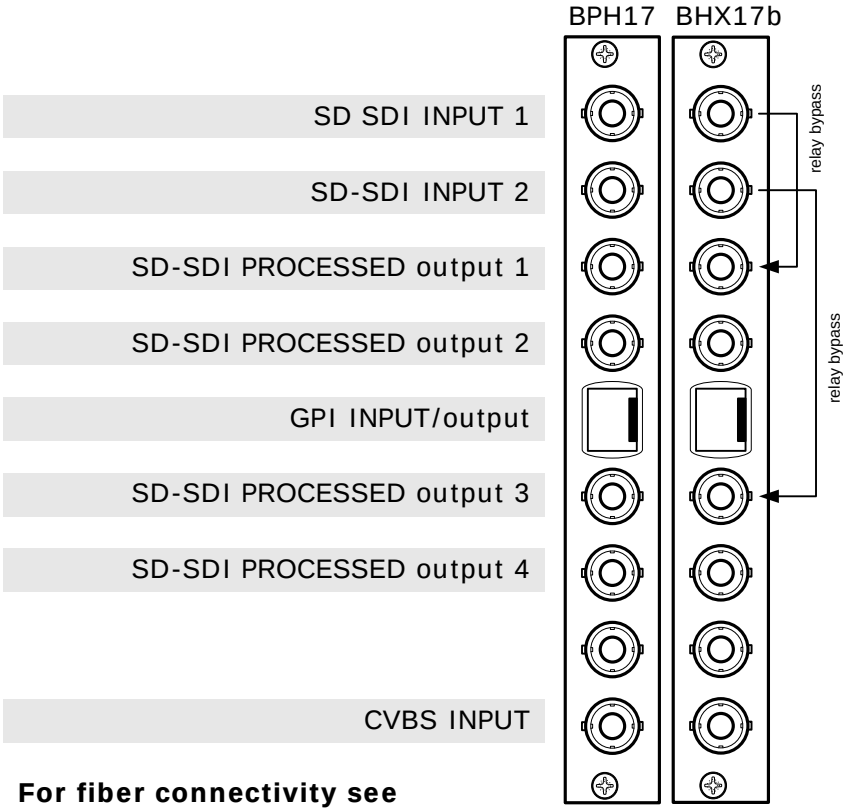

For fiber connectivity see www.axon.tv

!Unused inputs and outputs must be terminated with the correct impedance!

GPI pinning

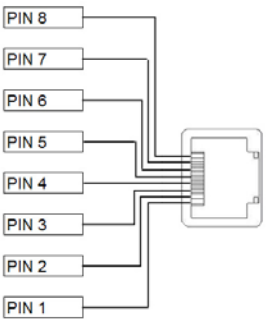

Pin	Function
1	GPI in 0
2	GPI in 1
3	GPI in 2
4	GPI in 3
5	GPI in 4
6	GPI out 1
7	GPI out 2
8	Ground

Appendix 1 Card dip-switches for bhx/bph configuration

There are dip-switches on the circuit board of the card itself. With these dip-switches you can change the power-voltages that is put on the backpanel. By default the switches are set to off, putting no power on the backpanel. The picture below displays where the switch is positioned on the card.

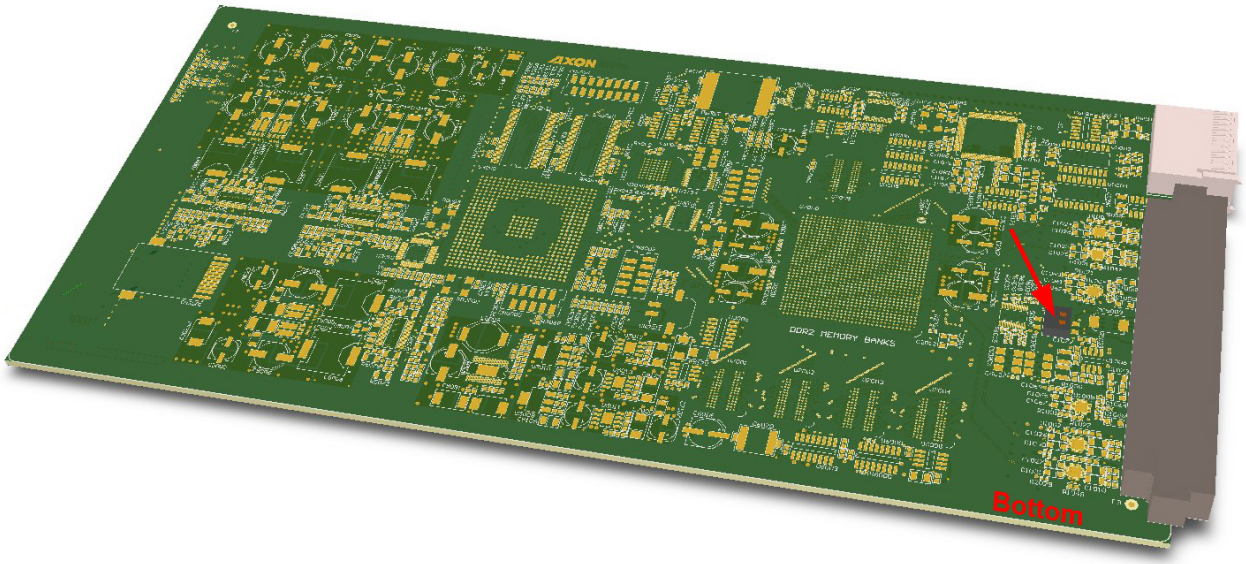

Using BHX17b

When using the backpanel with bypass relay (BHX17b), you must first set the **bottom-side** dip-switch to 'on'. This will pass 5 volt to the backpanel. If this is not done, the relays won't work at all.

Using BPH17 with fiber I/O

When using the backpanel with fiber I/O, you must first set the **top-side** dip-switch to 'on'. This will pass 30 volt to the backpanel. If this is not done, the relays won't work at all.

This product contains open-source software

This product contains open-source software licensed under the GNU Public License (GPL). A copy of the GNU Public License is included below. Under this license you are eligible to receive a copy of the source code of this software including any changes.

Axon Digital Design shall provide the source code on request either through physical distribution or electronic communication. For physical distribution you may be charged a fee that covers distribution costs. This offer is valid up to three years after date of purchase. Please direct your request to the support department of Axon Digital Design.

Axon Digital Design supports open-source software by participating in the development of open-source projects or submitting improvements to these projects. For more information see http://opensource.axon.tv/

GNU Public License version 2

TERMS AND CONDITIONS FOR COPYING, DISTRIBUTION AND MODIFICATION

0. This License applies to any program or other work which contains a notice placed by the copyright holder saying it may be distributed under the terms of this General Public License. The “Program”, below, refers to any such program or work, and a “work based on the Program” means either the Program or any derivative work under copyright law: that is to say, a work containing the Program or a portion of it, either verbatim or with modifi cations and/or translated into another language. (Hereinafter, translation is included without limitation in the term “modifi cation”.) Each licensee is addressed as “you”.

Activities other than copying, distribution and modifi cation are not covered by this License; they are outside its scope. The act of running the Program is not restricted, and the output from the Program is covered only if its contents constitute a work based on the Program (independent of having been made by running the Program). Whether that is true depends on what the Program does.

1. You may copy and distribute verbatim copies of the Program’s source code as you receive it, in any medium, provided that you conspicuously and appropriately publish on each copy an appropriate copyright notice and disclaimer of warranty; keep intact all the notices that refer to this License and to the absence of any warranty; and give any other recipients of the Program a copy of this License along with the Program.

You may charge a fee for the physical act of transferring a copy, and you may at your option offer warranty protection in exchange for a fee.

2. You may modify your copy or copies of the Program or any portion of it, thus forming a work based on the Program, and copy and distribute such modifications or work under the terms of Section 1 above, provided that you also meet all of these conditions:

a) You must cause the modified files to carry prominent notices stating that you changed the fi les and the date of any change.
b) You must cause any work that you distribute or publish, that in whole or in part contains or is derived from the Program or any part thereof, to be licensed as a whole at no charge to all third parties under the terms of this License.
c) If the modified program normally reads commands interactively when run, you must cause it, when started running for such interactive use in the most ordinary way, to print or display an announcement including an appropriate copyright notice and a notice that there is no warranty (or else, saying that you provide a warranty) and that users may redistribute the program under these conditions, and telling the user how to view a copy of this License. (Exception: if the Program itself is interactive but does not normally print such an announcement, your work based on the Program is not required to print an announcement.)

These requirements apply to the modified work as a whole. If identifiable sections of that work are not derived from the Program, and can be reasonably considered independent and separate works in themselves, then this License, and its terms, do not apply to those sections when you distribute them as separate works. But when you distribute the same sections as part of a whole which is a work based on the Program, the distribution of the whole must be on the terms of this License, whose permissions for other licensees extend to the entire whole, and thus to each and every part regardless of who wrote it.

Thus, it is not the intent of this section to claim rights or contest your rights to work written entirely by you; rather, the intent is to exercise the right to control the distribution of derivative or collective works based on the Program.

In addition, mere aggregation of another work not based on the Program with the Program (or with a work based on the Program) on a volume of a storage or distribution medium does not bring the other work under the scope of this License.

3. You may copy and distribute the Program (or a work based on it, under Section 2) in object code or executable form under the terms of Sections 1 and 2 above provided that you also do one of the following:

a) Accompany it with the complete corresponding machine-readable source code, which must be distributed under the terms of Sections 1 and 2 above on a medium customarily used for software interchange; or,
b) Accompany it with a written offer, valid for at least three years, to give any third party, for a charge no more than your cost of physically performing source distribution, a complete machine-readable copy of the corresponding source code, to be distributed under the terms of Sections 1 and 2 above on a medium customarily used for software interchange; or,

c) Accompany it with the information you received as to the offer to distribute corresponding source code. (This alternative is allowed only for noncommercial distribution and only if you received the program in objects code or executable form with such an offer, in accord with Subsection b above.)

The source code for a work means the preferred form of the work for making modifi cations to it. For an executable work, complete source code means all the source code for all modules it contains, plus any associated interface defi nition fi les, plus the scripts used to control compilation and installation of the executable. However, as a special exception, the source code distributed need not include anything that is normally distributed (in either source or binary form) with the major components (compiler, kernel, and so on) of the operating system on which the executable runs, unless that component itself accompanies the executable.

If distribution of executable or object code is made by offering access to copy from a designated place, then offering equivalent access to copy the source code from the same place counts as distribution of the source code, even though third parties are not compelled to copy the source along with the object code.

4. You may not copy, modify, sublicense, or distribute the Program except as expressly provided under this License. Any attempt otherwise to copy, modify, sublicense or distribute the Program is void, and will automatically terminate your rights under this License. However, parties who have received copies, or rights, from you under this License will not have their licenses terminated so long as such parties remain in full compliance.

5. You are not required to accept this License, since you have not signed it. However, nothing else grants you permission to modify or distribute the Program or its derivative works. These actions are prohibited by law if you do not accept this License. Therefore, by modifying or distributing the Program (or any work based on the Program), you indicate your acceptance of this License to do so, and all its terms and conditions for copying, distributing or modifying the Program or works based on it.

6. Each time you redistribute the Program (or any work based on the Program), the recipient automatically receives a license from the original licensor to copy, distribute or modify the Program subject to these terms and conditions. You may not impose any further restrictions on the recipients' exercise of the rights granted herein. You are not responsible for enforcing compliance by third parties to this License.

7. If, as a consequence of a court judgment or allegation of patent infringement or for any other reason (not limited to patent issues), conditions are imposed on you (whether by court order, agreement or otherwise) that contradict the conditions of this License, they do not excuse you from the conditions of this License. If you cannot distribute so as to satisfy simultaneously your obligations under this License and any other pertinent obligations, then as a consequence you may not distribute the Program at all. For example, if a patent license would not permit royalty-free redistribution of the Program by all those who receive copies directly or indirectly through you, then the only way you could satisfy both it and this License would be to refrain entirely from distribution of the Program.

If any portion of this section is held invalid or unenforceable under any particular circumstance, the balance of the section is intended to apply and the section as a whole is intended to apply in other circumstances.

It is not the purpose of this section to induce you to infringe any patents or other property right claims or to contest validity of any such claims; this section has the sole purpose of protecting the integrity of the free software distribution system, which is implemented by public license practices. Many people have made generous contributions to the wide range of software distributed through that system in reliance on consistent application of that system; it is up to the author/donor to decide if he or she is willing to distribute software through any other system and a licensee cannot impose that choice.

This section is intended to make thoroughly clear what is believed to be a consequence of the rest of this License.

8. If the distribution and/or use of the Program is restricted in certain countries either by patents or by copyrighted interfaces, the original copyright holder who places the Program under this License may add an explicit geographical distribution limitation excluding those countries, so that distribution is permitted only in or among countries not thus excluded. In such case, this License incorporates the limitation as if written in the body of this License.

9. The Free Software Foundation may publish revised and/or new versions of the General Public License from time to time. Such new versions will be similar in spirit to the present version, but may differ in detail to address new problems or concerns.

Each version is given a distinguishing version number. If the Program specifies a version number of this License which applies to it and "any later version", you have the option of following the terms and conditions either of that version or of any later version published by the Free Software Foundation. If the Program does not specify a version number of this License, you may choose any version ever published by the Free Software Foundation.

10. If you wish to incorporate parts of the Program into other free programs whose distribution conditions are different, write to the author to ask for permission. For software which is copyrighted by the Free Software Foundation, write to the Free Software Foundation; we sometimes make exceptions for this. Our decision will be guided by the two goals of preserving the free status of all derivatives of our free software and of promoting the sharing and reuse of software generally.

NO WARRANTY

11. BECAUSE THE PROGRAM IS LICENSED FREE OF CHARGE, THERE IS NO WARRANTY FOR THE PROGRAM, TO THE EXTENT PERMITTED BY APPLICABLE LAW. EXCEPT WHEN OTHERWISE STATED IN WRITING THE COPYRIGHT HOLDERS AND/OR OTHER PARTIES PROVIDE THE PROGRAM "AS IS" WITHOUT WARRANTY OF ANY KIND, EITHER EXPRESSED OR IMPLIED, INCLUDING, BUT NOT LIMITED TO, THE IMPLIED WARRANTIES OF MERCHANTABILITY AND FITNESS FOR A PARTICULAR PURPOSE. THE ENTIRE RISK AS TO THE QUALITY AND PERFORMANCE OF THE PROGRAM IS WITH YOU. SHOULD THE PROGRAM PROVE DEFECTIVE, YOU ASSUME THE COST OF ALL NECESSARY SERVICING, REPAIR OR CORRECTION.

12. IN NO EVENT UNLESS REQUIRED BY APPLICABLE LAW OR AGREED TO IN WRITING WILL ANY COPYRIGHT HOLDER, OR ANY OTHER PARTY WHO MAY MODIFY AND/OR REDISTRIBUTE THE PROGRAM AS PERMITTED ABOVE, BE LIABLE TO YOU FOR DAMAGES, INCLUDING ANY GENERAL, SPECIAL, INCIDENTAL OR CONSEQUENTIAL DAMAGES ARISING OUT OF THE USE OR INABILITY TO USE THE PROGRAM (INCLUDING BUT NOT LIMITED TO LOSS OF DATA OR DATA BEING RENDERED INACCURATE OR LOSSES SUSTAINED BY YOU OR THIRD PARTIES OR A FAILURE OF THE PROGRAM TO OPERATE WITH ANY OTHER PROGRAMS), EVEN IF SUCH HOLDER OR OTHER PARTY HAS BEEN ADVISED OF THE POSSIBILITY OF SUCH DAMAGES.