Synapse

2GU100/110
2HU100/110

Dual channel 3Gb/s, HD up-converter with color corrector and optional cross input audio shuffler

Installation and Operation manual

MASTER Card

3 TRIPLE RATE GB/s, HD, SD

Powered by LINUX

Committed.

AXON®

Synapse

TECHNICAL MANUAL

2GU100/110
2HU100/110

Lange Wagenstraat 55
NL-5126 BB Gilze
The Netherlands
Phone: +31 161 850 450
Fax: +31 161 850 499
E-mail: Info@axon.tv
Web: www.axon.tv

WARNING: TO REDUCE THE RISK OF FIRE OR ELECTRICAL SHOCK, DO NOT EXPOSE THIS APPLIANCE TO RAIN OR MOISTURE

● ALWAYS disconnect your entire system from the AC mains before cleaning any component. The product frame (SFR18 or SFR04) must be terminated with three-conductor AC mains power cord that includes an earth ground connection. To prevent shock hazard, all three connections must always be used.
● NEVER use flammable or combustible chemicals for cleaning components.
● NEVER operate this product if any cover is removed.
● NEVER wet the inside of this product with any liquid.
● NEVER pour or spill liquids directly onto this unit.
● NEVER block airflow through ventilation slots.
● NEVER bypass any fuse.
● NEVER replace any fuse with a value or type other than those specified.
● NEVER attempt to repair this product. If a problem occurs, contact your local Axon distributor.
● NEVER expose this product to extremely high or low temperatures.
● NEVER operate this product in an explosive atmosphere.

Warranty: Axon warrants their products according to the warranty policy as described in the general terms. That means that Axon Digital Design BV can only warrant the products as long as the serial numbers are not removed.

Date created: 09-07-2009
Date last revised: 06-11-2015

This product complies with the requirements of the product family standards for audio, video, audio-visual entertainment lighting control apparatus for professional use as mentioned below.

CE	EN60950	Safety
	EN55103-1: 1996	Emission
	EN55103-2: 1996	Immunity

Axon Digital Design 2GU100/110 2HU100/110 Tested To Comply With FCC Standards FOR HOME OR OFFICE USE	This device complies with part 15 of the FCC Rules Operation is subject to the following two conditions: (1) This device may cause harmful interference, and (2) This device must accept any interference received, including interference that may cause undesired operation.

Table of Contents

1 Introduction to Synapse

An Introduction to Synapse

Synapse is a modular system designed for the broadcast industry. High density, intuitive operation and high quality processing are key features of this system. Synapse offers a full range of converters and processing modules. Please visit the AXON Digital Design Website at www.axon.tv to obtain the latest information on our new products and updates.

Local Control Panel

The local control panel gives access to all adjustable parameters and provides status information for any of the cards in the Synapse frame, including the Synapse rack controller. The local control panel is also used to back-up and restore card settings. Please refer to the RRC18, RRC10, RRC04, RRS18 and RRS04 manuals for a detailed description of the local control panel, the way to set-up remote control over IP and for frame related settings and status information.

Remote Control Capabilities

The remote control options are explained in the rack controller (RRC18/RRC10/RRC04/RRS18/RRS04) manual. The method of connection to a computer using Ethernet is described in the RRC/RRS manual.

!

CHECK-OUT: "SYNAPSE CORTEX" SOFTWARE WILL INCREASE SYSTEM FLEXIBILITY OF ONE OR MORE SYNAPSE FRAMES

Although not required to use Cortex with a Synapse frame, you are strongly advised to use a remote personal computer or laptop PC with Synapse Cotrtex installed, as this increases the ease of use and understanding of the modules.

2 Unpacking and Placement

Unpacking

The Axon Synapse card must be unpacked in an anti-static environment. Care must be taken NOT to touch components on the card – always handle the card carefully by the edges. The card must be stored and shipped in anti-static packaging. Ensuring that these precautions are followed will prevent premature failure from components mounted on the board.

Placing the card

The Synapse card can be placed vertically in an SFR18 frame or horizontally in an SFR04 and SFR08 frame. Locate the two guide slots to be used, slide in the mounted circuit board, and push it firmly to locate the connectors.

Correct insertion of card is essential as a card that is not located properly may show valid indicators, but does not function correctly.

NOTE: On power up all LED's will light for a few seconds, this is the time it takes to initialise the card.

NOTE: Please check appendix 2 before connecting any backpanel!

3 A Quick Start

When Powering-up

On powering up the Synapse frame, the card set will use basic data and default initialisation settings. All LED's will light during this process. After initialisation, several LED's will remain lit – the exact number and configuration is dependant upon the number of inputs connected and the status of the inputs.

Changing settings and parameters

The front panel controls or the Synapse Cortex can be used to change settings. An overview of the settings can be found in chapter 5, 6 and 7 of this manual.

Front Panel Control

Front Panel Display and Cursor

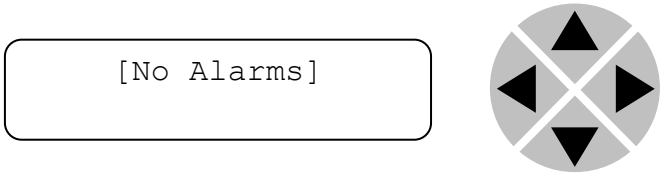

Settings are displayed and changed as follows;

Use the cursor 'arrows' on the front panel to select the menu and parameter to be displayed and/or changed.

Press ►	To go forward through the menu structure.
Press ◄	To go back through the menu structure.
Press ▲	To move up within a menu or increase the value of a parameter.
Press ▼	To move down through a menu or decrease the value of a parameter.

NOTE: Whilst editing a setting, pressing ► twice will reset the value to its default.

Example of changing parameters using front panel control

With the display as shown below

```
RRC18 [Select Card]
>S01=SFS10
```

Pressing the ► selects the SFS10 in frame slot 01.

The display changes to indicate that the SFS10 has been selected. In this example the `Settings` menu item is indicated.

```
SFS10 [Select Menu]
>Settings
```

Pressing the ► selects the menu item shown, in this example `Settings`.

(Pressing ▲ or ▼ will change to a different menu eg `Status`, `Events`).

The display changes to indicate that the SFS10 `Settings` menu item `SDI-Format` has been selected and shows that it current setting is `Auto`.

```
SFS10 [Settings]
>SDI-Format=Auto
```

Pressing the ► selects the settings item shown, in this example `SDI-Format`.

(Pressing ▲ or ▼ will change to a different setting, eg `Mode`, `H-Delay`).

The display changes to indicate that the SFS10 `Edit Setting` menu item `SDI-Format` has been selected.

```
SFS10 Edit Setting]
SDI-Format>Auto
```

To edit the setting of the menu item press ▲ or ▼.

All menu items can be monitored and/or changed in this way. Changing a setting has an immediate effect.

Synapse Cortex Software

Synapse Cortex can be used to change the settings of Synapse modules from a PC, either locally or remotely. The software enables communication based on TCP/IP between the Setup PC and Synapse frames/modules.

Each Synapse frame is addressed through its rack controller's unique IP address, giving access to each module, its menus and adjustment items. Synapse Cortex has access to data contained within the Synapse module and displays it on a GUI. The software has an intuitive structure following that of the module that it is controlling.

For operation of Synapse Cortex, please refer to the Cortex manual.

Menu Structure Example

Slot	Module		Item		Parameter		Setting
▲							
▲							
S02			Identity				
▲			▲				
S01	SFS10	▶	Set-tings	▶	Standard_dig	▶	Auto
▼			▼		▼		▼
S00	RRC18		Status		Mode		625
			▼		▼		▼
			Events		Ref-Input		525
					▼		
					H-Delay		
					▼		
					▼		

NOTE: Further information about Front Panel Control and Synapse Cortex can be obtained from the RRC and RRS operational manuals and the Cortex help files.

4 The 2GU100/110 Card

Introduction

The 2GU100/110 and 2HU100/110 are dual channel high-quality up converters. The optimized scaling and filter algorithms ensure crisp broadcast ready pictures from a native SD or HD source, by use of a 64 tap FIR filters. The cards allow you to simulcast 2 HD or 3Gb/s (2GU models only) signals from 2 native HD, SD or 1 CVBS and an SD infrastructure. The embedded audio is carried over to the HD or 3Gb/s domain. The appropriate aspect ratio can be applied by control of VI, WSS and GPI inputs by use of 8 presets per output that can store the aspect ratio conversions.

Beside a high quality up converter, the 2HU110 and 2GU110 are also very powerful cross-input audio shufflers and proc-amps. With the 110 models you can de-embed 2x 8 channels out of any of the 16 embedded audio channels of both HD/SD inputs and shuffle these channels. This means you can combine embedded audio channels from input 1 and embedded audio channels from input 2 in your 3Gb/s (2GU), HD, SD outputs. The embedded audio is carried over to the HD or 3Gb/s domain.

The **2GU**100/110 is compatible with 270Mb/s, 1.5Gb/s and **3Gb/s** for full 1080p/50 or 1080p/59.94 use. The 2HU100/110 is compatible with SD SDI (270Mb/s) and HD-SDI (1.5Gb/s) and can be future upgraded to 3Gb/s compatibility

Features

- 3 inputs: 2 SDI and 1 composite.
- Configurable output function (Straight, Crosses, A only or B only)
- Low latency conversion process (as low as 1 field in controlled timing environment)
- Compatible with the following input and output formats (auto selecting). One standard can be chosen for both outputs simultaneously:
  - 1080p/59.94 (2GU only)
  - 1080p/50 (2GU only)
  - 1080i/59.94
  - 1080i/50
  - 1080p/23.98
  - 1080psf/23.98
  - 720p/59.94
  - 720p/50
  - 720p/23.98
  - SD525
  - SD625
- Two individual conversion paths. The inputs can be different standards SD or HD and unlocked to the single output format.
- Frame sync with output phase control in Frames, Lines and pixels with respect to reference. Delay setting are stored per output format for a constant latency operation.
- 30 frames (1080i/p), 60 frames (720p) or 125 frames (SD) delay offset per channel
- Individual color corrector (RGB and total gain, RGB and total black) for video path A and B
- Video proc-amp (Y and C control)
- Hue control for NTSC inputs

- ARC modes contain:
  - Anamorphic
  - Center Cut
  - V-Zoom
  - LBox-16:9
  - LBox-14:9
  - PBox-4:3
  - PBox-14:9
  - Variable H and V (50—200%)
- 16 Free individual programmable presets banks for:
  - Up converter ARC A and B
  - Transparent ARC A and B
  - VI/WSS/S2016 insertion A and B
  - Embedder shuffling/Gain/Phase (-110 only)
- 5 GPI inputs assignable to various preset banks
- ARC triggers by VI, WSS, WSSext and S2016 (AFD)
- Transparent for 8 channels of embedded audio per channel
- Embedded domain cross input audio shuffling, gain and phase control (-110 only)
- Embedding and de-embedding through synapse bus
- Locks to Tri-level, Bi-level syncs and SDI input
- Timecode cross conversion
- Full control and status monitoring through the front panel of the SFR04/SFR08/SFR18 frame and the Ethernet port (ACP)

Complementary cards:
- DAC20, DAC24, DAS24, DIO48, ADC20, ADC24, DIO24, DLA44, DLA43

Conversion capabilities

The 2GU100/110 can handle the following conversions (the 2HU100/110 can not handle the 1080p50 and 1080p59.94 output formats):

		Output										
	CONVERSION	**1080psf23.97**	**1080p23.97**	**1080p50***	**1080p59.94***	**1080i59.94**	**1080i50**	**720p59.94**	**720p50**	**720p23.98**	**480i59.94(525)**	**576i50(625)**
SDI Input	**1080psf23.97**	x										
	1080p23.97		x									
	1080p50*			x								
	1080p59.94*				x							
	1080i59.94					x						
	1080i50						x					
	720p59.94							x				
	720p50								x			
	720p23.98									x		
	480i59.94(525)	x	x			x		x		x	x	
	576i50(625)			x			x		x			x
CVBS	**480i59.94(NTSC)**	x	x			x		x		x	x	
	576i50(PAL)			x			x		x			x

Applications

- High quality low latency up-conversion (with zero motion artifacts) for 2 channels
- Free running fill-in camera positions up-conversion and synchronization

2HU110 and 2GU110 only:

- Combining embedded audio channels of 2 inputs into 1 (see image below)

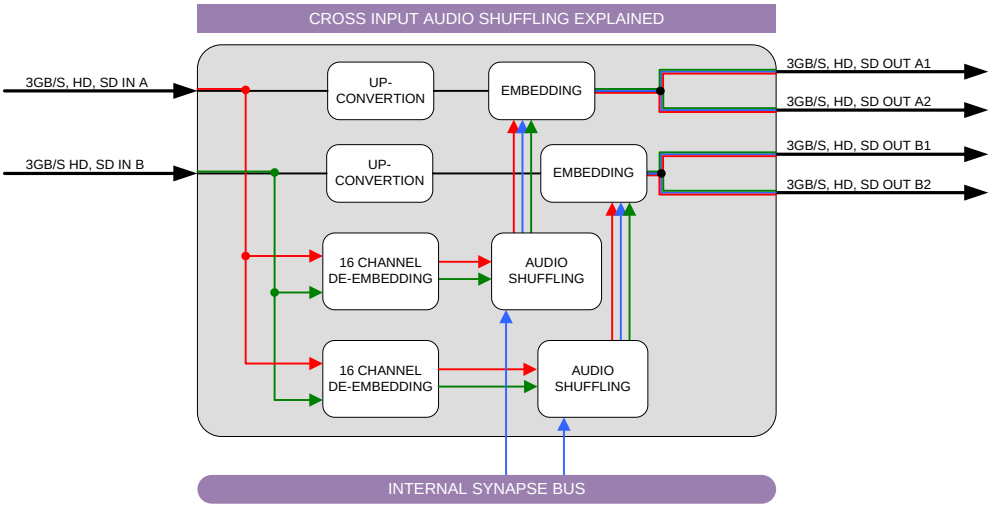

Block schematic

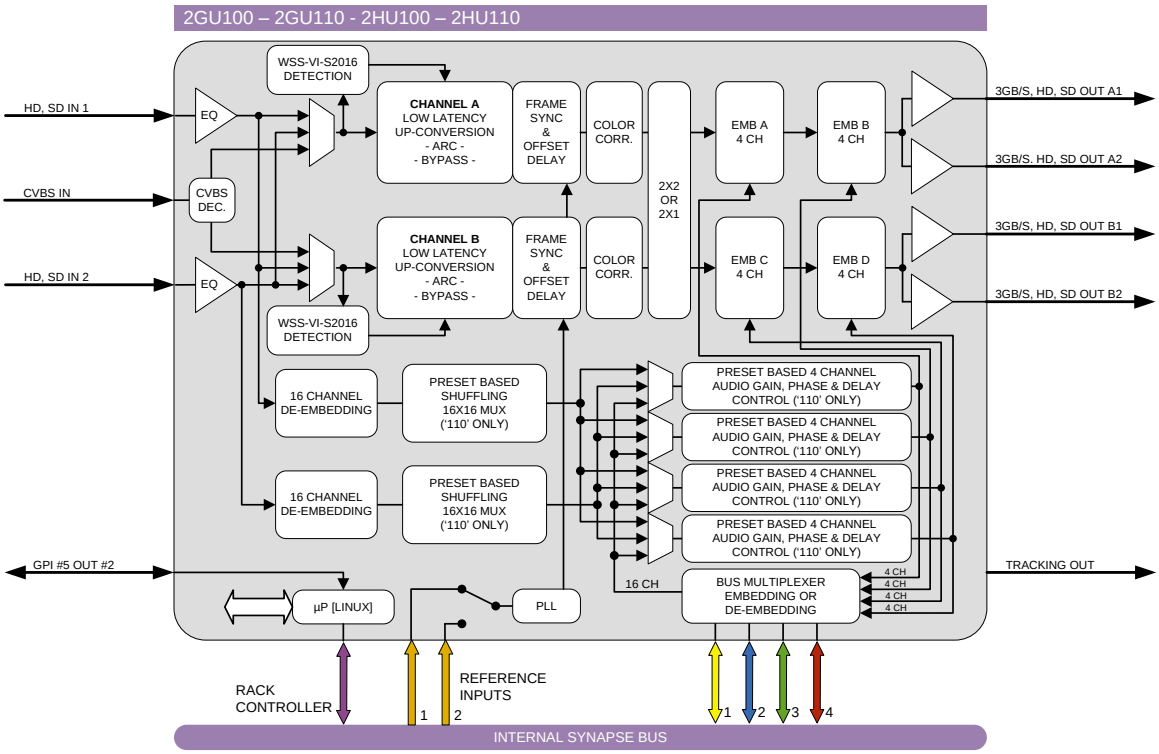

5 Settings Menu

Introduction

The settings menu displays the current state of each 2GU-2HU100/110 setting and allows you to change or adjust it. Settings can be changed using the front panel of the Synapse frame (SFR18, SFR08 or SFR04) or with Cortex. Also the SCP08 control can be used. Please refer to chapter 3 for information on the Synapse front panel control and Cortex.

Note: All items preceded with a #-sign are part of the presets.

SYSTEM SETTINGS

IO-Ctrl

This card has separate presets for the input and output settings under the 'SYSTEM SETTINGS' header. With this item you select how the IO presets are controlled: Manually (manual, default), via GPI-triggers (GPI, GPI-A, GPI-B or GPI-C) or by the input format on input 1 (SDI1-Format) or input 2 (SDI2-Format). The input formats are mapped to the preset as followed:

Format:	Preset:
1080i60	Preset 1
1080i50	Preset 2
1080p30	Preset 3
1080p25	Preset 4
1080p24	Preset 5
720p60	Preset 7
720p50	Preset 8
720p30	Preset 9
720p25	Preset 10
720p24	Preset 11
SD525	Preset 12
SD625	Preset 13
1080p50	Preset 14
1080p60	Preset 15

IO_Prst_Act

With this item you can manually change the currently active IO settings. Can be any preset between 1 and 8. By default it is set to 1. All menu settings that are preceded with a '# '-prefix under the 'SYSTEM SETTINGS' header are part of the preset.

IO_Prst_Edit

Here you can select which of the 8 selectable IO settings presets you want to edit. Changing this will not change the active preset, unless the currently active preset is the same you are going to edit. All menu settings that are preceded with a '# '-prefix under the 'SYSTEM SETTINGS' header are part of the preset.

#Inp_SelA

With this item you can select which input you want to use for Channel A. Can be SDI-1 (SDI input 1), SDI-2 (SDI input 2) or Analog (CVBS in). You can also choose a Zoneplate or Colorbar as input. Can also be set to Off to switch off channel A entirely. The default for this setting is SDI-1.

#Inp_SelB

With this item you can select which input you want to use for Channel B. Can be SDI-1 (SDI input 1), SDI-2 (SDI input 2) or Analog (CVBS in). You can also choose a Zoneplate or Colorbar as input. Can also be set to Off to switch off channel B entirely. The default for this setting is SDI-2.

#CVBS-frmt

With this item you can set the format of the CVBS input. Possible formats to select here are (default is Auto):

- PAL-M
- PAL-N
- NTSC-M
- NTSC-4.43
- NTSC-J
- SECAM
- PAL-60
- PAL-BGHID
- Auto (automatic detection and selection)

#Out-Ctrl

This setting controls the output format of the card. When set to Manual, the output format corresponds to the Out-Frmt setting. When set to Auto, the output format follows the input format. Possible settings are:

- Manual (default)
- Auto

#Out-Frmt

With Out-Frmt you can set what the output should be of channel A as well as channel B. Possible settings are:

- 1080i60 (default), 1080i50
- 1080p50, 1080p60
- 1080p24
- 1080psf24
- 720p60, 720p50
- 720p24
- SD525, SD625

#Out-Mode

With this setting you choose which input should be on which output. There's 4 modes are available:

- `Straight` (default): Channel A to outputs A1-A2, Channel B to outputs B1-B2
- `Crossed`: Channel A to outputs B1-B2, Channel B to outputs A1-A2
- `A Only`: Channel A to all outputs
- `B Only`: Channel B to all outputs

Note: *When in 'A only' or 'B only' modes, you can process 16 channels of audio for the outputs. When in mixed modes you can process only 8 channels of audio per input.*

Also take into account that when in 'A only' all the settings that involve video channel B are discarded and when in 'B only' all channel A settings are discarded.

#F-delay

`F-Delay` sets the amount of delayed Frames. The available range is from 0 to 250 fields (dependant on the I/O). Default is `0F`. The preset master for this is `Out-Frmt`, hence the '#'-prefix.

#V-delay

`V-Delay` setting allows adjustment of the vertical phase of the output signal with respect to the selected reference input.

The `V-Delay` setting gives a delay in addition to the reference timing. For example: if the `V-Delay` is set to 10 TV HD lines, the output signal will be delayed by reference timing + 10 TV HD lines. The signal is delayed (advanced) with respect to the phase of the reference signal. The available range is from 0 to a maximum of 1125 lines (dependant on I/O format). The default setting is `0ln`. The preset master for this is `Out-Frmt`, hence the '#'-prefix.

#H-delay

The H-Delay setting allows adjustment of the Horizontal phase of the output signal with respect to the selected reference input.

The H-Delay setting gives a delay in addition to the reference timing. For example: if the H-Delay is set to 10 pixels, the output signal will be delayed by reference timing + 10 pixels. The signal is delayed (advanced) with respect to the phase of the reference signal. The available range is from 0 to a maximum of 5124 pixels (dependant on I/O format). The default setting is `0px`. The preset master for this is `Out-Frmt`, hence the '#'-prefix.

#Freeze_A

`Freeze` enables the capture of one video frame on the A-channel. The settings of `Freeze` are `On` or `Off`. The default setting is `Off`.

#Freeze_B

`Freeze` enables the capture of one video frame on the B-channel. The settings of `Freeze` are `On` or `Off`. The default setting is `Off`.

#LowPassFilt_A

Here you can set the horizontal and vertical video low-pass filter for channel A. These are the possible settings:

- `Off`: the normal broadband filters will be used when the card is converting. A 64 taps brick wall type horizontal filter:

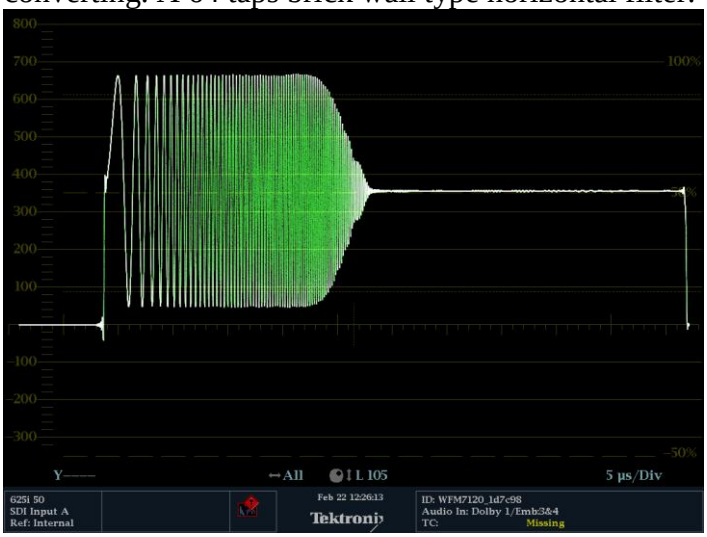

- `H_only`: a less steep filter with no aliasing Y and soft for C for less ringing effects:

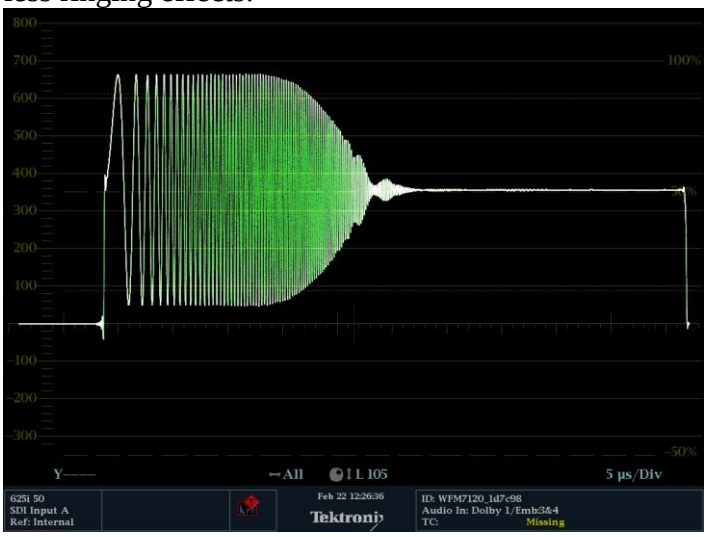

- `V_only`: vertical filters will be active which “soften” the image and prevents “ring”-effects in down converted content.
- `H_And_V`: same horizontal filter as described under `H_Only` will be active, together with the vertical filters described under `V_only`.

- `H2_Only`: less steep filter with aliasing and soft for C for less ringing, more sharpness but with aliasing:

- `H2_And_V`: same horizontal filter as described under `H2_Only` will be active, together with the vertical filters described under `V_only`.

Note: When the card is in **transparent** mode, the filters will be entirely bypassed.

#LowPAssFilt_B

This sets the horizontal and vertical low-pass filter for channel B. Refer to `#LowPassFilt_A` for an explanation of the possible settings.

Pos-Prst_Act

Active preset control for the position controls #H-Pos-A, #V-Pos-A, #H-Pos_B and #V-Pos-B. With this item you can manually change the currently active positioning settings. Default setting is 1.

Pos-Prst_Edit

Edit preset control for the position controls #H-Pos-A, #V-Pos-A, #H-Pos_B and #V-Pos-B. Here you can select which of the 8 selectable positioning settings presets you want to edit. Default setting is 1.

#H-Pos-A

Controls the horizontal positioning offset in pixels for channel A. Only works correctly when zooming in, for instance when downconverting using Center-Cut aspect ratio conversion.

#V-Pos-A

Controls the vertical positioning offset in pixels for channel A. Only works correctly when zooming in, for instance when downconverting using Center-Cut aspect ratio conversion.

#H-Pos-B

Controls the horizontal positioning offset in pixels for channel B. Only works correctly when zooming in, for instance when downconverting using Center-Cut aspect ratio conversion.

#V-Pos-B

Controls the vertical positioning offset in pixels for channel B. Only works correctly when zooming in, for instance when downconverting using Center-Cut aspect ratio conversion.

Delay-Status

It is possible to display (in the status menu `IODelayA` and `IODelayB`) the processing time of the card in the status menu. This setting allows you to switch this function `ON` or `OFF`.

Default setting is `OFF`

Lock-Mode

`Lock-Mode` determines whether the card is locked to his `input` (input 1), to the reference (`Ref1` or `Ref2`) or `freerun` (not locked). By default it is set to `Ref1`. Can also be set to `RefAuto`.

When set to `RefAuto` the card chooses ref1 as its source. Whenever ref1 fails, it will switch to ref 2 (only for SFR08 and SFR18 frames and only when ref2 offers the same ref format as ref 1). When ref 1 is back up again, it will only automatically switch back to ref 1 when ref 2 fails.

Ref-Type

Sets the type of incoming reference. Can be either Bi-Level or `Tri-Level`. Default is `Bi-Level`.

PrstEditView

With this setting set to `Follow Active`, the edit preset settings (like for instance `UP_Prst_editA` and `UP_Prst_editB`) will follow the active preset when the active preset is changed. This to avoid confusion when changing the active. Set to `Independent` the edit preset will not automatically follow active preset changes. By default set to `Follow Active`.

PatternSpeed

Sets the speed of the test-pattern (see settings `Inp_SelA` and `Inp_SelB`) animation between 0 (still) and 15 (fast). Default is 1.

SD-AR-Det

This card can switch between presets on the changes of the aspect ratio. Aspect ratio information can be taken out of the `VI` (video index), `WSS` (widescreen signaling) or `WSS-extended` (extended form of widescreen signaling). With this setting you can select which of the above protocols should be used to detect aspect ratio changes. By default it is set to `VI`.

NoWSS/VI_prstA	With this setting you can set to which preset the card should jump channel A, when no WSS or VI information is found. Can be any preset between `1` and `16` or `Hold` (holds current active preset). By default it is set to `Hold`.
NoWSS/VI_prstB	With this setting you can set to which preset the card should jump channel B, when no WSS or VI information is found. Can be any preset between `1` and `16` or `Hold` (holds current active preset). By default it is set to `Hold`.
Input_Loss_A	Here you can set what the output of channel A should be when the input is lost. Can be `Freeze`, `Colorbar`, `Zoneplate`, `Black`, `Grey` or `Green`.
Input_Loss_B	Here you can set what the output of channel B should be when the input is lost. Can be `Freeze`, `Colorbar`, `Zoneplate`, `Black`, `Grey` or `Green`.
	UP-CONV
Up_CtrlA	With this item you select how the presets for Channel A in up converter mode are controlled: Manually (`manual`), via GPI-triggers (`GPI`, `GPI-A`, `GPI-B` or `GPI-C`) or via changes of the SD Aspect Ratio (`SD-AR`). By default it is set to `Manual`.
Up_Prst_actA	With this item you can manually change the currently active preset of channel A in up converter mode. Can be any preset between 1 and 16. By default it is set to 1. All menu settings that are preceded with a '`#Up`'-prefix are part of the preset.
UP_Prst_editA	Here you can select which of the 16 selectable presets you want to edit for Channel A in up converter mode. Changing this will not change the active preset, unless the currently active preset is the same you are going to edit. All menu settings that are preceded with a '`#Up`'-prefix are part of the preset.

#Up_ArcA

With this item you set the Aspect Ratio of the output of channel A in up converter mode. Can be `Anamorphic`, `V-Zoom`, `PBox-4:3`, `PBox-14:9` or `Variable` (custom set AR, set by H-scale and V-scale settings). The following table shows examples of the possible aspect ratios when the input source is 4:3.

Setting:	**Result on 16:9 screens:**
`Anamorphic`	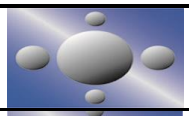
`V-Zoom`	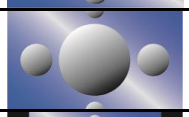
`PBox-4:3`	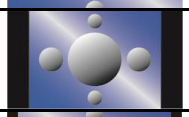
`PBox-14:9`	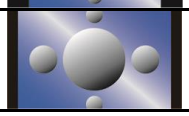
`Anam-702`	Anamorphic scaling based on 702 active pixels instead of 720 pixels
`Variable`	Dependant on `Up_H-scale` and `UP_V-scale` settings.

#Up_H-scaleA

The horizontal scaling of the TV picture of channel A in up converter mode is set using `#Up_H-scaleA`. `#Up_H-scaleA` can be set within the range of 50% to 200% of the input signal (only used when `#Up_ArcA` is set to `variable`). Default value is 100%.

#Up_V-scaleA

Sets the vertical scaling of the TV picture of channel A in up converter mode. Can be set within the range of 50% to 200% of the input signal (only used when `#Up_ArcA` is set to `variable`). Default value is 100%.

#Up_H-EnhA

With this item you can set the horizontal picture enhancement of channel A in up converter mode between 0 and 100%. Default 0%.

#Up_ColorConvA

`ColorConvA` optimizes the color conversion for Channel A in up converter mode. As the color coding of HD (709) and SD(601) are different, it is necessary to convert these when Channel A is up-converting. The best result is generated when the up-converter is active and the `601to709` setting is selected. It is also possible to switch the filter `off`. The default setting is `601to709`.

Up_CtrlB

With this item you select how the presets for Channel B are controlled in up converter mode: Manually (`manual`), via GPI-triggers (`GPI`, `GPI-A`, `GPI-B`, `GPI-C`) or via changes of the SD Aspect Ratio (`SD-AR`). By default it is set to `Manual`.

Up_Prst_actB

With this item you can manually change the currently active preset of channel B in up converter mode. Can be any preset between 1 and 16. By default it is set to 1. All menu settings that are preceded with a '`#Up`'-prefix are part of the preset.

UP_Prst_editB

Here you can select which of the 16 selectable presets you want to edit for Channel B in up converter mode. Changing this will not change the active preset, unless the currently active preset is the same you are going to edit. All menu settings that are preceded with a '`#Up`'-prefix are part of the preset.

#Up_ArcB

With this item you set the Aspect Ratio of the output of channel B in up converter mode. Can be `Anamorphic`, `V-Zoom`, `PBox-4:3`, `PBox-14:9`, `Anam-702` or `Variable` (custom set AR, set by H-scale and V-scale settings). The table in setting `#Up_ArcA` shows examples of the possible aspect ratios when the input source is 4:3.

#Up_H-scaleB

The horizontal scaling of the TV picture of channel B in up converter mode is set using `#Up_H-scaleB`. `#Up_H-scaleB` can be set within the range of 50% to 200% of the input signal (only used when `#Up_ArcB` is set to `variable`). Default value is 100%.

#Up_V-scaleB

Sets the vertical scaling of the TV picture of channel B in up converter mode. Can be set within the range of 50% to 200% of the input signal (only used when `#Up_ArcB` is set to `variable`). Default value is 100%.

#Up_H-EnhB

With this item you can set the horizontal picture enhancement of channel B in up converter mode between 0 and 100%. By default set to 0%.

#Up_ColorConvB

`ColorConvB` optimizes the color conversion in up converter mode. As the color coding of HD (709) and SD (601) are different, it is necessary to convert these when Channel B is up-converting. The best result is generated when the up-converter is active and the `601to709` setting is selected. It is also possible to switch the filter `off`. The default setting is `601to709`.

TRANSPARENT
In transparent mode (no conversion) the card is not transparent for horizontal and vertical blanking, except for audio!

Tr_CtrlA

With this item you select how the presets for Channel A are controlled in Transparent mode: Manually (`manual`), via GPI-triggers (`GPI`, `GPI-A`, `GPI-B` or `GPI-C`) or via changes of the HD Aspect Ratio (`S2016`). By default it is set to `Manual`.

Tr_Prst_ActA

With this item you can manually change the currently active preset of channel A in Transparent mode. Can be any preset between 1 and 16. By default it is set to 1. All menu settings that are preceded with a '`#Tr`'-prefix are part of the preset.

Tr_Prst_EditA

Here you can select which of the 16 selectable presets you want to edit for Channel A in Transparent mode. Changing this will not change the active preset, unless the currently active preset is the same as the one you are going to edit. All menu settings that are preceded with a '`#Tr`'-prefix are part of the preset.

#Tr_ArcA

With this item you set the Aspect Ratio of the output of channel A in Transparent mode. Can be `Anamorphic` or `Variable` (custom set AR, set by H-scale and V-scale settings). The following table shows examples of the possible aspect ratios.

Setting:	Result:	
`Anamorphic`	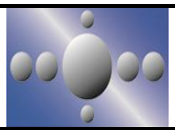	With 16:9 source on 4:3 screens
`Variable`	Dependant on `Tr_H-scale` and `Tr_V-scale` settings.	

#Tr_H-scaleA

The horizontal scaling of the TV picture of channel A in Transparent mode is set using `#Tr_H-scaleA`. `#Tr_H-scaleA` can be set within the range of 50% to 200% of the input signal (only used when `#Tr_ArcA` is set to `variable`). Default value is 100%.

#Tr_V-scaleA

Sets the vertical scaling of the TV picture of channel A in Transparent mode. Can be set within the range of 50% to 200% of the input signal (only used when `#Up_ArcA` is set to `variable`). Default value is 100%.

#Tr_H-EnhA

With this item you can set the horizontal picture enhancement of channel A in Transparent mode between 0 and 100%. By default set to 0%.

Tr_CtrlB	With this item you select how the presets for Channel B are controlled in Transparent mode: Manually (`manual`), via GPI-triggers (`GPI`, `GPI-A`, `GPI-B` or `GPI-C`) or via changes of the HD Aspect Ratio (`S2016`). By default it is set to `Manual`.
Tr_Prst_ActB	With this item you can manually change the currently active preset of channel B in Transparent mode. Can be any preset between 1 and 16. By default it is set to 1. All menu settings that are preceded with a '`#Tr`'-prefix are part of the preset.
Tr_Prst_EditB	Here you can select which of the 16 selectable presets you want to edit for Channel B in Transparent mode. Changing this will not change the active preset, unless the currently active preset is the same you are going to edit. All menu settings that are preceded with a '`#Tr`'-prefix are part of the preset.
#Tr_ArcB	With this item you set the Aspect Ratio of the output of channel B in Transparent mode. Can be `Anamorphic`, `V-Zoom`, `PBox-4:3`, `PBox-14:9` or `Variable` (custom set AR, set by H-scale and V-scale settings). The table under `#Tr_ArcA` shows examples of the possible aspect ratios.
#Tr_V-scaleB	Sets the vertical scaling of the TV picture of channel B in Transparent mode. Can be set within the range of 50% to 200% of the input signal (only used when `#Up_ArcB` is set to `variable`). Default value is 100%.
#Tr_H-EnhB	With this item you can set the horizontal picture enhancement of channel B in Transparent mode between 0 and 100%. By default set to 0%.
	INSERTER This card can insert several data values in the VBI of the outputs. With the following settings you can choose what you want to insert.
S2016-Line	With this setting you select a line in the VBI to where the AFD (SMPTE 2016) data should be written. Lines 0 till 31 are selectable. By default it is set to line 17.
Timecode_Inp	With this card it is possible to copy the embedded timecode information of either input `SDI-1` or input `SDI-2` to the output. With this setting you select which input you want to use, or switch the timecode inserting `Off` (default).

VITC_Ln_In

With this setting you can select what line of the input you want to copy the VITC data from (only when input is SD). Can be any line between line 7 and line 22. Default is line 19.

VITC_Ln_Ctrl

Here you can choose whether you want to select the line, to where you want to copy the timecode data to, manually (`manual`) or use the information in the `ATC_DBB` package to select the lines (ATC_DBB package contains information about the line duplication as well). Default is `Manual`.

VITC_Ln_625

When `VITC_Ln_Ctrl` is set to `Manual`, with this setting you can select a line between 7 and 22 when the output is SD625. Default is line 19.

VITC_Ln_525

When `VITC_Ln_Ctrl` is set to `Manual`, with this setting you can select a line between 7 and 22 when the output is SD525. Default is line 10.

VITC_Ln_Dup

When set to `On`, the VITC line is duplicated to the above selected line + 2 lines.

ATC_Dem_Sel

ATC source de-embed selection. Previously, the first ATC found in a field would be transcoded to the output. Now, the user can select whether to de-embed LTC, VITC or the first ATC found.

ATC_Emb_Sel

ATC_Emb_Sel: ATC destination embed selection. Previously, timecode was transcoded into VITC. Now the user can select whether to transcode to VITC or LTC.

Ins_CtrlA

With this item you select how the inserter presets for Channel A are controlled: Manually (`manual`), via GPI-triggers (`GPI`, `GPI-A`, `GPI-B` or `GPI-C`), via changes of the SD Aspect Ratio (`SD_AR`) or the HD aspect ratio (`S2016)` (AFD)). Default is `Manual`.

Ins_Prst_ActA

With this item you can manually change the currently active preset of channel A when in transparent mode. Can be any preset between 1 and 16. By default it is set to 1. All menu settings that are preceded with a '`#Ins`'-prefix are part of the preset.

Ins_Prst_EditA

Here you can select which of the 16 selectable presets you want to edit for Channel A when in a transparent mode. Changing this will not change the active preset, unless the currently active preset is the same you are going to edit. All menu settings that are preceded with a '`#Ins`'-prefix are part of the preset.

#VI-InsertA

You can turn VI insertion `on` or `off` for channel A. Default is `Off`.

#VI-DataA

With the `#VI-InsertA` setting set to `on`, you can select VI values with this setting, which you want to be inserted in Channel A. possible are all VI values between `4:3_0` and `4:3_7` and the settings between `16:9_0` and `16:9_7`. Default is `4:3_0`.

#WSS-InsertA

You can choose which type of WSS data you want to insert in Channel A with this setting, or switch WSS insertion entirely `off` (default value). You can set it to `Standard` or `Extended`.

#WSS-StndA

With the `#WSS-InsertA` setting set to `Standard`, you can select WSS standard values with this setting, which you want to be inserted in Channel A. possible are all WSS values between `1_vid` and `8_vid` and the settings between `1_flm` and `8_flm`. Default is `1_vid`.

#WSS-ExtndA

With the `#VI-InsertA` setting set to `on`, you can select VI values with this setting, which you want to be inserted in Channel A. possible are all WSS values between `4:3_0` and `4:3_7` and the settings between `16:9_0` and `16:9_7`. Default is `4:3_0`.

#VI-DataA

With the `#WSS-InsertA` setting set to `extended`, you can select WSS extended values with this setting, which you want to be inserted in Channel A. possible are all VI settings between `4:3_0` and `4:3_7` and the settings between `16:9_0` and `16:9_7`. Default is `4:3_0`.

#S2016-InsertA

You can turn S2016 (AFD) insertion `on` or `off` for channel A. Default is `Off`.

#S2016-DataA

With the `#S2016-InsertA` setting set to `on`, you can select AFD values with this setting, which you want to be inserted in Channel A. possible are all AFD values between `AFD0` and `AFD15`.

Ins_CtrlB

With this item you select how the inserter presets for Channel A are controlled: Manually (manual), via GPI-triggers (GPI), via changes of the HD Aspect Ratio (VI, WSS, WSS-ext or S2016 (AFD)). Default is Manual.

Ins_Prst_ActB

With this item you can manually change the currently active preset of Channel B when in transparent mode. Can be any preset between 1 and 16. By default it is set to 1. All menu settings that are preceded with a #Ins-prefix are part of the preset.

Ins_Prst_EditB

Here you can select which of the 16 selectable presets you want to edit for Channel B when in a transparent mode. Changing this will not change the active preset, unless the currently active preset is the same you are going to edit. All menu settings that are preceded with a #Ins-prefix are part of the preset.

#VI-InsertB

You can turn VI insertion on or off for channel B. Default is Off.

#VI-DataB

With the #VI-InsertB setting set to on, you can select VI values with this setting, which you want to be inserted in Channel B. possible are all VI values between 4:3_0 and 4:3_7 and the settings between 16:9_0 and 16:9_7. Default is 4:3_0.

#WSS-InsertB

You can choose which type of WSS data you want to insert in Channel B with this setting, or switch WSS insertion entirely off (default value). You can set it to Standard or Extended.

#WSS-StndB

With the #WSS-InsertB setting set to Standard, you can select WSS standard values with this setting, which you want to be inserted in Channel B. possible are all WSS values between 1_vid and 8_vid and the settings between 1_flm and 8_flm. Default is 1_vid.

#WSS-ExtndB

With the #VI-InsertB setting set to on, you can select VI values with this setting, which you want to be inserted in Channel B. possible are all WSS values between 4:3_0 and 4:3_7 and the settings between 16:9_0 and 16:9_7. Default is 4:3_0.

#VI-DataB

With the #WSS-InsertB setting set to extended, you can select WSS extended values with this setting, which you want to be inserted in Channel B. possible are all VI settings between 4:3_0 and 4:3_7 and the settings between 16:9_0 and 16:9_7. Default is 4:3_0.

#S2016-InsertB	You can turn S2016 (AFD) insertion `on` or `off` for Channel B. Default is `Off`.
#S2016-DataB	With the `#S2016-InsertB` setting set to `on`, you can select AFD values with this setting, which you want to be inserted in Channel B. possible are all AFD values between `AFD0` and `AFD15`.
	VIDEO PROC
GainA	With this setting you control the overall gain of the video of channel A between 50 and 150%. Default is 100%.
R-GainA	`R-GainA` controls the Red gain of channel A. The control range is between 50% and 150%. The default setting is 100%.
G-GainA	`G-GainA` controls the Green gain of channel A. The control range is between 50% and 150%. The default setting is 100%.
B-GainA	`B-GainA` controls the Blue gain of channel A. The control range is between 50% and 150%. The default setting is 100%.
GainB	With this setting you control the overall gain of the video of channel B between 50 and 150%. Default is 100%.
R-GainB	`R-GainB` controls the Red gain of channel B. The control range is between 50% and 150%. The default setting is 100%.
G-GainB	`G-GainB` controls the Green gain of channel B. The control range is between 50% and 150%. The default setting is 100%.
B-GainB	`B-GainB` controls the Blue gain of channel B The control range is between 50% and 150%. The default setting is 100%.
BlackA	`BlackA` controls the total R-G-B Black gain of channel A. The control range is between –128bit and 127bit. The default setting is 0bit.
R-BlackA	`R-BlackA` controls the Red-Black of channel A. The control range is between –128bits and 127 bits in steps of 1 bit The default setting is 0 bit.

G-BlackA	G-BlackA controls the Green-Black of channel A. The control range is between –128bits and 127 bits in steps of 1 bit The default setting is 0 bit.
B-BlackA	B-BlackA controls the Blue-Black of channel A. The control range is between –128bits and 127 bits in steps of 1 bit The default setting is 0 bit.
BlackB	BlackB ontrols the total R-G-B Black gain of channel B The range is between –128bit and 127bit. The default setting is 0bit.
R-BlackB	R-BlackBcontrols the Red-Black of channel B. The range is between –128bits and 127 bits. The default setting is 0 bit.
G-BlackB	G-BlackB ontrols the Green-Black of channel B. The range is between –128bits and 127 bits. The default setting is 0 bit.
B-BlackB	B-BlackB controls the Blue-Black of channel B. The range is between –128bits and 127 bits. The default setting is 0 bit.
CVBS-Hue	This item adjusts the HUE of the CVBS input. Can be set between -90 and +90 degrees. Default is 0 degrees.
	AUDIO PROC AMP
Audio-Bus-IO	This setting can change the Audio bus order from the normal 1234 (=default) to 1324. The 1324 order is of use to route the 1st group of audio from the 2nd input to the 2nd channel of a slave card (like the DIO48).
Audio_Ctrl	With this setting you select how the audio presets should be controlled. Can be either Manually (Manual), via GPI-triggers (GPI, GPI-A, GPI-B or GPI-C), via the SD aspect ratio (SD-AR) or via the HD aspect ratio (S2016).
Audio_Prst_act	With this item you can manually change the currently active audio preset. Can be any preset between 1 and 16. By default it is set to 1. All menu settings that are preceded with a '#Emb'-prefix are part of the preset.

Audio_Prst_Edit	Here you can select which of the 16 selectable audio presets you want to edit. Changing this will not change the active preset, unless the currently active preset is the same you are going to edit. All menu settings that are preceded with a '`#Emb`'-prefix are part of the preset.
#Audio_Delay	With this item you can delay all audio between 0ms and 1000ms. Default is 0ms. This item is part of the audio presets.
	EMBEDDER
#EmbA_Grp	With this setting you select in to which audio group (= 4 audio channels) of the outputs you want to embed the first 4 forwarded audio channels coming from the de-embedders/add-on bus. Can be `group1`, `group2`, `group3` or `group4`. You can also choose to not use these 4 audio channels for anything by setting this item to `off`. By default it is set to `Group1`.
#EmbA1_Inp ~ #EmbA4_Inp	With these settings you can select where the corresponding audio channels (channel A1 till channel A4) of the outputs are coming from. In this card you can choose to get the audio from the de-embedder of SDI input 1 (`Demb-SDI1`) or SDI input 2 (`Demb-SDI2`), the embedder of the active input (`Demb-Input`, dependant on the current active input), from the ADD-ON bus groups, or to mute the corresponding channel (set to `off`). Defaults here are `Off`. ***Note:*** With this card the ADD-ON bus can only be used to either embed audio or de-embed audio. When one of the `EmbXx_Inp` settings is set to embed from the ADD-ON bus, no audio will be de-embedded towards the bus anymore, not for any of the channels.
#EmbA1_Inp_Ch ~ #EmbA4_Inp_Ch	With these settings you can select which Channel of the selected input should be embedded to the corresponding output channel. Can be any channel between `Ch_1` and `Ch_16`. Defaults for A1 till A4 are respectively `Ch_1` till `Ch_4`.
#EmbB_Grp	With this setting you select in to which audio group (= 4 audio channels) of the outputs you want to embed the second 4 forwarded audio channels coming from the de-embedders/add-on bus. Can be `group1`, `group2`, `group3` or `group4`. You can also choose to not use these 4 audio channels for anything by setting this item to `off`. By default it is set to `Group2`.

#EmbB1_Inp ~ #EmbB4_Inp

With these settings you can select where the corresponding audio channels (channel B1 till channel B4) of the outputs are coming from. In this card you can choose to get the audio from the de-embedder of SDI input 1 (`Demb-SDI1`) or SDI input 2 (`Demb-SDI2`), the embedder of the active input (`Demb-Input`,dependant on the current active input), from the ADD-ON bus groups, or to mute the corresponding channel (set to `off`). Defaults here are `Off`.

Note: With this card the ADD-ON bus can only be used to either embed audio or de-embed audio. When one of the `EmbXx_Inp` settings is set to embed from the ADD-ON bus, no audio will be de-embedded towards the bus anymore, not for any of the channels.

#EmbB1_Inp_Ch ~ #EmbB4_Inp_Ch

With these settings you can select which Channel of the selected input should be embedded to the corresponding output channel. Can be any channel between `Ch_1` and `Ch_16`. Defaults for B1 till B4 are respectively `Ch_5` till `Ch_8`.

#EmbC_Grp

With this setting you select in to which audio group (= 4 audio channels) of the outputs you want to embed the third group of 4 forwarded audio channels coming from the de-embedders/add-on bus. Can be `group1`, `group2`, `group3` or `group4`. You can also choose to not use these 4 audio channels for anything by setting this item to `off`. By default it is set to `Group2`.

#EmbC1_Inp ~ #EmbC4_Inp

With these settings you can select where the corresponding audio channels of the outputs are coming from. In this card you can choose to get the audio from the de-embedder of SDI input 1 (`Demb-SDI1`) or SDI input 2 (`Demb-SDI2`), the embedder of the active input (`Demb-Input`, dependant on the current active input), from the ADD-ON bus groups, or to mute the corresponding channel (set to `off`). Defaults here are `Off`.

Note: With this card the ADD-ON bus can only be used to either embed audio or de-embed audio. When one of the `EmbXx_Inp` settings is set to embed from the ADD-ON bus, no audio will be de-embedded towards the bus anymore, not for any of the channels.

#EmbC1_Inp_Ch ~ #EmbC4_Inp_Ch

With these settings you can select which Channel of the selected input should be embedded to the corresponding output channel. Can be any channel between `Ch_1` and `Ch_16`. Defaults for C1 till C4 are respectively `Ch_9` till `Ch_12`.

#EmbD_Grp	With this setting you select in to which audio group (= 4 audio channels) of the outputs you want to embed the last 4 forwarded audio channels coming from the de-embedders/add-on bus. Can be `group1`, `group2`, `group3` or `group4`. You can also choose to not use these 4 audio channels for anything by setting this item to `off`. By default it is set to `Group2`.
#EmbD1_Inp ~ #EmbD4_Inp	With these settings you can select where the corresponding audio channels of outputs B are coming from. In this card you can choose to get the audio from the de-embedder of SDI input 1 (`Demb-SDI1`) or SDI input 2 (`Demb-SDI2`), the embedder of the active input (`Demb-Input`, dependant on the current active input), from the ADD-ON bus groups, or to mute the corresponding channel (set to `off`). Defaults here are `Off`. ***Note:*** With this card the ADD-ON bus can only be used to either embed audio or de-embed audio. When one of the `EmbXx_Inp` settings is set to embed from the ADD-ON bus, no audio will be de-embedded towards the bus anymore, not for any of the channels.
#EmbD1_Inp_Ch ~ #EmbD4_Inp_Ch	With these settings you can select which Channel of the selected input should be embedded to the corresponding output channel. Can be any channel between `Ch_1` and `Ch_16`. Defaults for C1 till C4 are respectively `Ch_13` till `Ch_16`.
#EmbA1_Gain ~ #EmbD4_Gain	Adjusts the gain for the corresponding audio channel between -60 and 12dB. Everything below -999 dB means the audio will be muted.
#EmbA1_Phase ~ #EmbD4_Phase	Adjusts the audio phase of the corresponding to 0 deg or 180 deg.
	GPI-CTRL
Contact _1 ~ Contact_5	In this card it is possible to make the 5 available GPI contacts part of a GPI pool that can control the various functions in the card separately (all `Xx_Ctrl` items of the menu). With these item you can select which pool the corresponding GPI is part of. You can also choose to not use the corresponding GPI at all by setting it to `Off`. Possible settings are: ▪ `GPI A`: part of GPI-A pool, triggered once Take A is closed. ▪ `GPI B`: part of GPI-B pool, triggered once Take B is closed. ▪ `GPI C`: part of GPI-C pool, triggered once Take C is closed. Please refer to 'Appendix 3: GPI's explained' for a more elaborate explanation of the GPI settings and status items.

GPI_A-mode ~ GPI_C-mode	Selects the mode for the corresponding GPI pool. Possible settings are: ▪ `Prio`: Each contact triggers another value, so values are one-hot encoded. ▪ `Prio_latched`: This mode functions like `Prio` Mode, but the card latches the value. Each contact triggers another value, so values are one-hot encoded. Use this mode when using pushbuttons. ▪ `Binary`: Values are coded in a binary fashion, with code "00000" coding for a starting value of 1, as can be seen in the GPI status items. Please refer to 'Appendix 3: GPI's explained' for a more elaborate explanation of the GPI settings and status items.
GPI_A-Take ~ GPI_C-Take	Selects a take contact for the corresponding GPI pool. Possible settings are: ▪ `Off`: No take contact is defined, and values on the GPI contact are taken instantly. ▪ `Contact_1 ~ Contact_5`: The selected contact is used as a Take command for the corresponding pool. Closing the selected contact results in the card latching the value provided on the selected contacts for that pool. Please refer to 'Appendix 3: GPI's explained' for a more elaborate explanation of the GPI settings and status items.
	NETWORK
IP_Conf0	With this setting you can let the card obtain an IP address automatically via `DHCP`, or appoint a `manual` set IP address. By default this setting is set to `Manual`.
mIP0	When `IP_Conf0` is set to `manual`, you can type in the preferred IP address here. By default it is set to 172.16.1.2
mNM0	With `IP_Conf0` set to `manual`, with this setting you can set a Netmask. Default is 255.255.0.0
mGW0	With `IP_Conf0` set to `manual`, this setting let you set a Standard Gateway. Default is set to 172.16.0.1
NetwPrefix0	Here you can set the proper network prefix if required.

6 Status Menu

Introduction

The status menu indicates the current status of each item listed below.

sInp1

This status item indicates the presence and format of a valid signal in input 1. This is displayed as:

- 1080P60
- 1080p50
- 1080i60
- 1080i50
- 1080p30
- 1080p25
- 1080p24
- 1035i60
- 720p60
- 720p50
- 720p30
- 720p25
- 720p24
- SD525
- SD625
- NA

sInp1_VI

Displays the detected VI value found in input1. This is displayed as follows:

- 4:3_0
- 4:3_1
- 4:3_2
- 4:3_3
- 4:3_4
- 4:3_5
- 4:3_6
- 4:3_7
- 16:9_0
- 16:9_1
- 16:9_2
- 16:9_3
- 16:9_4
- 16:9_5
- 16:9_6
- 16:9_7
- NA (no VI detected)

sInp1_WSS-Stnd

This status item displays the detected standard WSS value of input 1. this is displayed as follows:

- `1_vid`
- `2_vid`
- `3_vid`
- `4_vid`
- `5_vid`
- `6_vid`
- `7_vid`
- `8_vid`
- `1_flm`
- `2_flm`
- `3_flm`
- `4_flm`
- `5_flm`
- `6_flm`
- `7_flm`
- `8_flm`
- `NA` (no standard WSS detected)

sInp1_WSS-Extd

This item displays the detected extended WSS value of input 1. This is displayed as follows:

- `4:3_0`
- `4:3_1`
- `4:3_2`
- `4:3_3`
- `4:3_4`
- `4:3_5`
- `4:3_6`
- `4:3_7`
- `16:9_0`
- `16:9_1`
- `16:9_2`
- `16:9_3`
- `16:9_4`
- `16:9_5`
- `16:9_6`
- `16:9_7`
- `NA` (no WSS extended detected)

sInp1_S2016

This item displays the detected SMPTE 2016 (AFD) values of input 1. This is displayed as follows:

- `AFD0`
- `AFD1`
- `AFD2`
- `AFD3`
- `AFD4`
- `AFD5`
- `AFD6`
- `AFD7`
- `AFD8`
- `AFD9`
- `AFD10`
- `AFD11`
- `AFD12`
- `AFD13`
- `AFD14`
- `AFD15`
- `NA` (no S2016 detected)

sInp1_CRC_EDH

This item indicates CRC and EDH errors on input 1. Can be:

- `Off`
- `OK`
- `Error`
- `NA`
- `NoPCM`

sInp2

This status item indicates the presence and format of a valid signal in input 2. This is displayed as listed under `sInp1`.

sInp2_VI

Displays the detected VI value found in input2. This is displayed as listed under `sInp1_VI`.

sInp2_WSS-Stnd

Displays the detected WSS-standard value found in input2. This is displayed as listed under `sInp1_WSS-Stnd`.

sInp2_WSS-Extnd

Displays the detected WSS-extended value found in input2. This is displayed as listed under `sInp1_WSS-ext`.

sInp2_S2016

Displays the detected S2016 value found in input2. This is displayed as listed under `sInp1_S2016`.

sInp2_CRC_EDH

This item indicates CRC and EDH errors on input 2. Can be:

- Off
- OK
- Error
- NA
- NoPCM

sInp3_WSS-Stnd

Displays the detected WSS-standard value found in input3 (CVBS input). This is displayed as listed under sInp1_WSS-Stnd.

sInp3_WSS-Extnd

Displays the detected WSS-extended value found in input3 (CVBS input). This is displayed as listed under sInp1_WSS-ext.

sInpCVBS

This status item indicates the detected input format on the CVBS input. This is displayed as one of the following values:

- NTSC-J
- NTSC-M
- NTSC-4.43
- PAL-BGHID
- PAL-N
- PAL-M
- PAL-60
- SECAM
- SECAM-525
- NA (no input detected)

IODelayA

Displays the total delay in ms of outputs A1 and A2. can be a value between 0ms and 5000ms.

IODelayB

Displays the total delay in ms of outputs B1 and B2. can be a value between 0ms and 5000ms.

FunctionA

Displays the current function outputs A1 and A2. For the card it can only be Up, Trans, TestPattern or NA.

FunctionB

Displays the current function outputs B1 and B2. For the card it can only be Up, Trans, TestPattern or NA.

Ref

Displays whether a correct reference is found (Present) or not (NA)

Contact_Status	Displays the currently closed GPI contacts. This is displayed as for instance 10100 when contacts 1 and 3 are closed and for instance 01110 when contacts 2, 3 and 4 are closed.
GPIA	Displays the current value of GPI pool A
GPIB	Displays the current value of GPI pool B
GPIC	Displays the current value of GPI pool C
SDI1DemFrmt01/02 ~ SDI1DemFrmt15/16	These status items indicate the detected audio format of each audio pair in the de-embedder of SDI input 1. Can be one of the following formats: ▪ N/A ▪ PCM ▪ Null ▪ AC-3 ▪ TimeStmp ▪ MPEG-1 ▪ MPEG-2 ▪ SMPTE-KLV ▪ Dolby E ▪ Caption data ▪ UserDef ▪ Rsvd ▪ Enh Ac-3
SDI2DemFrmt01/02 ~ SDI2DemFrmt15/16	These status items indicate the detected audio format of each audio pair in the de-embedder of SDI input 2. Same formats can be detected as listed under the previous status item.
	NET STATUS
IP_Addr0	This item displays the status of the IP address. It can be manual, DHCP asking, DHCP Leased or DHCP Infin.
MAC0	This item displays the MAC address of the card.
IP0	This item displays the current IP address of the card.

NM0	This item displays the current Netmask of the card.
GW0	This item displays the current Standard Gateway of the card.

7 Events Menu

Introduction

An event is a special message that is generated on the card asynchronously. This means that it is not the response to a request to the card, but a spontaneous message.

What is the Goal of an event?

The goal of events is to inform the environment about a changing condition on the card. A message may be broadcast to mark the change in status. The message is volatile and cannot be retrieved from the system after it has been broadcast. There are several means by which the message can be filtered.

Events

The events reported by the 2HU110 are as follows;

Announcements

`Announcements` is not an event. This item is only used for switching the announcement of status changes on/off. 0=off, other =on

Input_A

Input_A can be selected between 0 .. 255. 0= no event, 1..255 is the priority setting.

Input_B

Input_B can be selected between 0 .. 255. 0= no event, 1..255 is the priority setting.

Ref-Status

Reference can be selected between 0 .. 255. 0= no event, 1..255 is the priority setting.

Active_Out_A

Active output A can be selected between 0 .. 255. 0= no event, 1..255 is the priority setting.

Active_Out_B

Active output B can be selected between 0 .. 255. 0= no event, 1..255 is the priority setting.

What information is available in an event?

The message consists of the following items;

1) A message string to show what has happened in text, for example: “INP_LOSS”, “REF_LOSS”, “INP_RETURN”.
2) A tag that also shows what happens, but with a predefined number: e.g. 1 (= loss of input), 2 (= loss of reference), 129(= 1+128 = return of input). For a list of these predefined tags see the table on the next page.
3) A priority that marks the importance of an event. This value is defined by the user and can have any value between 1 and 255, or 0 when disabled.
4) A slot number of the source of this event.

The Message String

The message string is defined in the card and is therefore fixed. It may be used in controlling software like Synapse Set-up to show the event.

The Tag

The tag is also defined in the card. The tag has a fixed meaning. When controlling or monitoring software should make decisions based on events, it is easier to use the tag instead of interpreting a string. The first implementation is the tag controlled switch in the GPI16.

In cases where the event marks a change to fault status (e.g. 1 for Loss of Input) the complement is marked by the tag increased by 128 (80_{hex}) (e.g. 129 (81_{hex}) for Return of Input).

Defining Tags

The tags defined for the card are:

Event Menu Item	Tag		Description
Announcements	0 or NA	0 or NA	Announcement of report and control values
Input_A	01_{hex}=INPA_LOSS	81_{hex}=INPA_RETURN	input A lost or returned
Input_B	02_{hex}=INPB_LOSS	82_{hex}= INPB_RETURN	input B lost or returned
Reference	03_{hex}=REF_LOSS	83_{hex}=REF_RETURN	reference lost or returned
Acive_Out_A	19_{hex}=IN_B->OUT_A	99_{hex}= IN_A->OUT_A	Input B or input A on outputs A
Active_Out_B	$1a_{hex}$= IN_A->OUT_B	$9a_{hex}$=IN_B->OUT_B	Input A or input B on outputs B

The Priority

The priority is a user-defined value. The higher the priority of the alarm, the higher this value. Setting the priority to Zero disables the announcement of this alarm. Alarms with priorities equal or higher than the Error Threshold setting of the RRC will cause the error LED on the Synapse rack front panel to light.

The Address

Together with the message string or the tag, the slot number or address of the card is relevant to be able to assign the event to a certain card.

8 LED Indication

Error LED

The error LED indicates an error if the internal logic of the 2HU110 card is not configured correctly or has a hardware failure.

Input_A LED

This LED indicated the presence of a valid SDI video signal on input A.

Input_B LED

This LED indicated the presence of a valid SDI video signal on input B.

ANC Data LED

Indicates the presence of embedded audio within the input signal.

Reference LED

Indicated the presence of a valid reference signal on the selected reference input connector (ref-1 or ref-2).

Data Error LED

This LED indicates a CRC error.

Connection LED

This LED illuminates after the card has initialized. The LED lights for 0.5 seconds every time a connection is made to the card.

Error LED

The error LED indicates an error if the internal logic of the card is not configured correctly or has a hardware failure.

9 Block Schematic

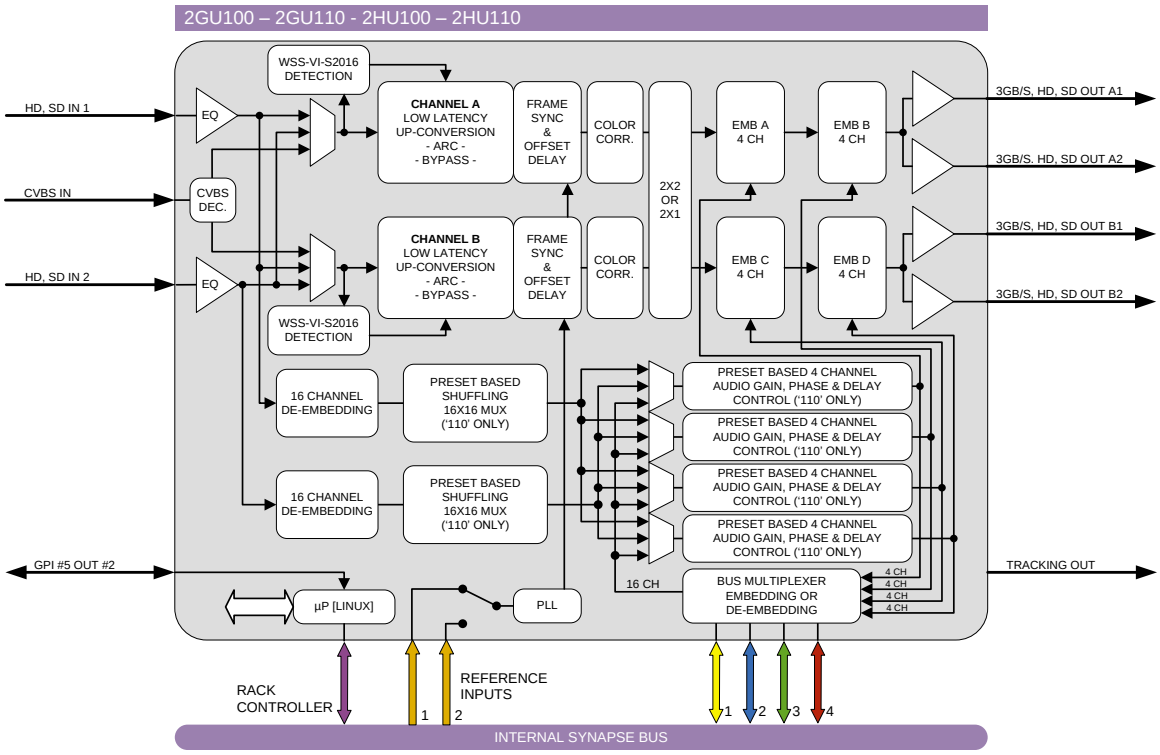

10 Connector Panels

The 2GU/2HU100-110 can be used with the BPH17 or the BHX17b. The following table displays the pinout of these backpanels in combination with the card.

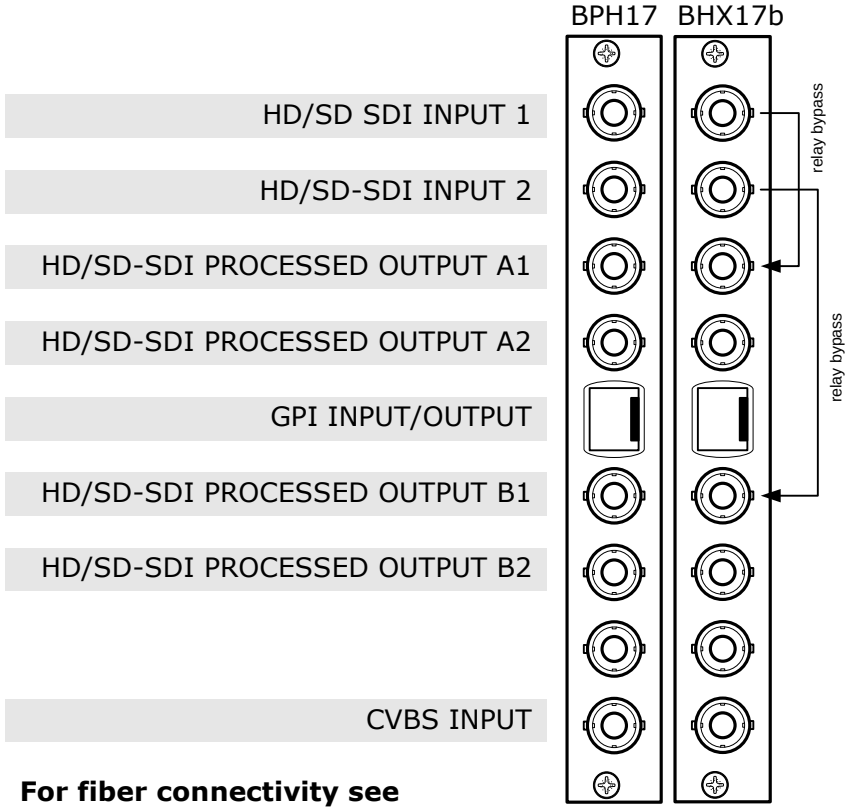

For fiber connectivity see www.axon.tv

!Unused inputs and outputs must be terminated with the correct impedance!

GPI pinning

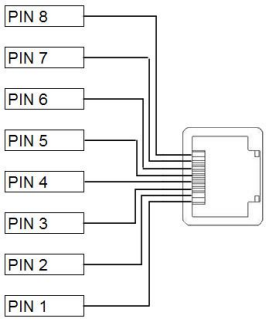

Pin	Function
1	GPI in 1
2	GPI in 2
3	GPI in 3
4	GPI in 4
5	GPI in 5
6	GPI out 1
7	GPI out 2
8	Ground

Appendix 1 Card dip-switches for BHX and fiber configuration

There are dip-switches on the circuit board of the card itself. With these dip-switches you can change the power-voltages that is put on the backpanel. By default the switches are set to off, putting no power on the backpanel. The picture below displays where the switch is positioned on the card.

!	**When using a 'normal' BPH17 (passive) backpanel with this card, the dipswitch on the card itself must be switched <u>OFF</u>.**

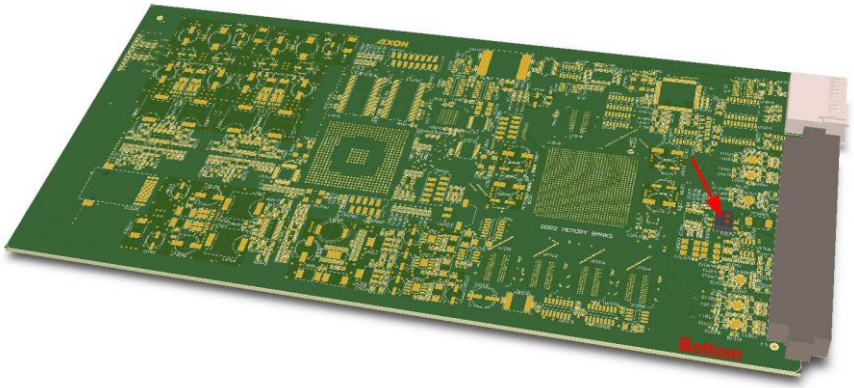

Using BPH17 with fiber I/O

When using a BPH17 backpanel with fiber I/O, you must first set the **top-side** dip-switch on the **synapse board** to 'on'. This will pass 30 volt to the backpanel. If this is not done, the relays won't work at all.

Using BHX17b

When using the backpanel with bypass relay (BHX17b), you must first set the **bottom-side** dip-switch **on the card** to 'on'. This will pass 5 volt to the backpanel. If this is not done, the relays won't work at all.

On the BHX17b itself there are also 2 dipswitches (see picture on the next page). The bottom dipswitch is not connected. With the top switch you can choose the Bypass function. There are 2 possible function indications "on" (printed on the dip switch itself) and "off":

"**Direct Backpanel Switchover**" dipswitch set to **ON**:
Will make the BHX-backpanel switch over to the processed signal as soon as it detects the trigger signal from the connected synapse card. This setting will minimize the bypass time and ensures fast recovery of processed signals.
The **ON** setting is recommended if the BHX-backpanel is used in combination with synapse cards:

- which have a short initialization time, or
- which have a delayed trigger-signal onboard.

"**Direct Backpanel Switchover**" dipswitch set to **`OFF` (default)**: Will make the BHX-backpanel switch after about 15 seconds from the moment the BHX-backpanel detects the trigger signal from the connected synapse card. This setting will allow more time for complex synapse cards to finish initialization and stabilize proper signal processing before the backpanel switches over to the processed signal.
The **`OFF`** setting is recommended if the BHX-backpanel is used in combination with synapse cards:

- which are more complex and thus need longer initialization time and do NOT have a delayed trigger-signal onboard.

Note: In case of power failure or when the synapse board is extracted from the frame the bypass is immediately active.

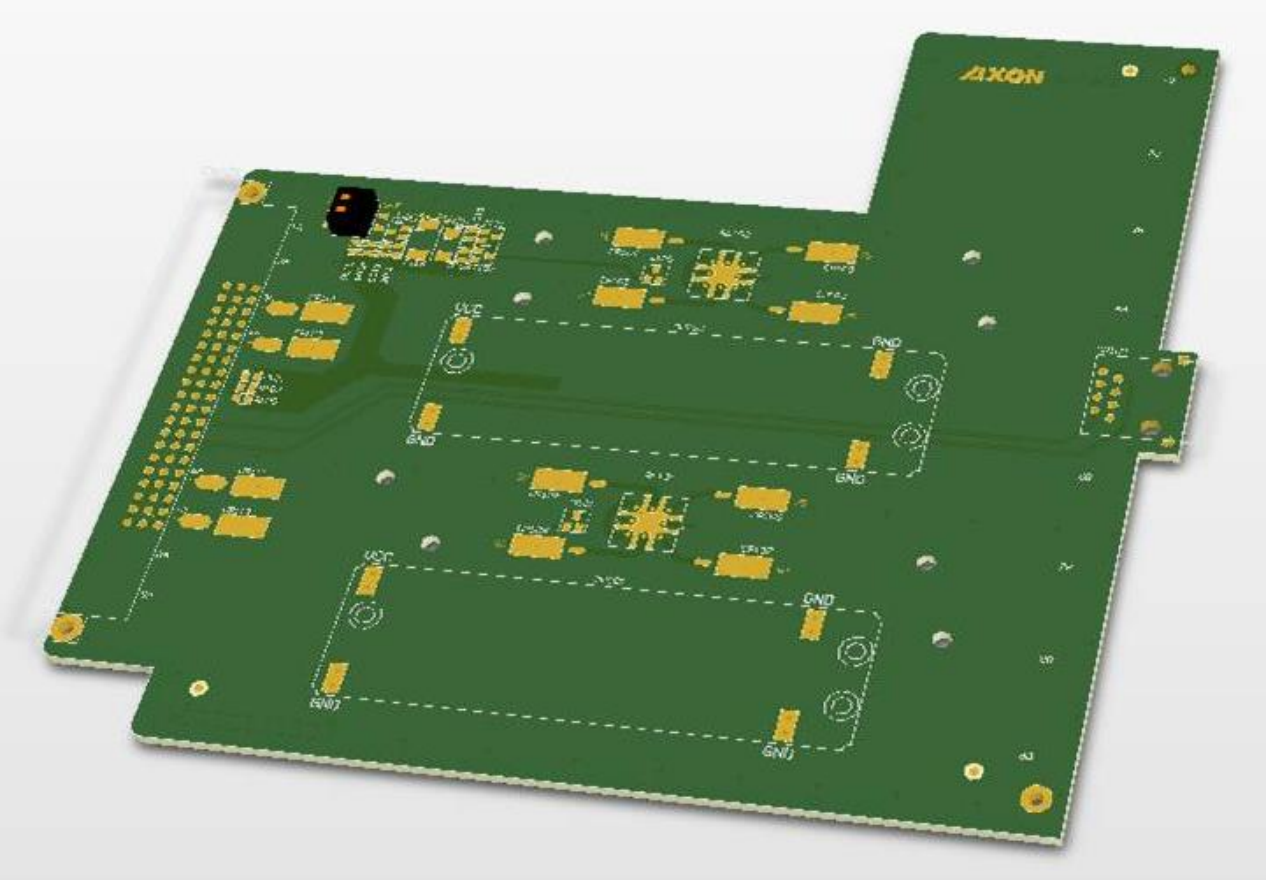

Appendix 3 GPI's explained

Introduction

This appendix describes the functionality of the GPI's generally used within the Synapse based products.

General functionality

The physical contacts of a General Purpose Interface can be assigned by the user. In our cards the General Purpose Interface contacts (GPI contacts) will be named as General Purpose Input (GPI) or General Purpose Output (GPO). The GPI inputs and outputs are assignable to different preset banks. These preset banks (GPI pools) can be used to switch multiple settings at once. Some examples of these functions:

- Input selection
- Output mode
- Up conversion aspect ratio for channel A and B
- Down conversion aspect ratio for channel A and B
- Cross conversion aspect ratio for channel A and B
- Transparent aspect ratio (equal in-output) for channel A and B
- Insertion of VI, WSS, AFD (S2016) for channel A and B
- Audio shuffling, gain and phase

Contact assignment

The physical contacts can be assigned as input or output. In the menu of a card, these will be called `Contact_N` depending on the amount of contacts available. Contacts could be Inputs, outputs or bi-derictional I/O. The `Contact_N` menu item will be used to assign this specific contact to input or output pools. The choices are `Off`, `GPI_A`, `GPI_B`, `GPI_C`, …, `GPI_N`, `GPO_A`, `GPO_B`, `GPO_C`, …, `GPO_N` depending on the amount of contacts and pools.

Pools

A GPI/GPO pool is a place where contacts are collected to form an output trigger.

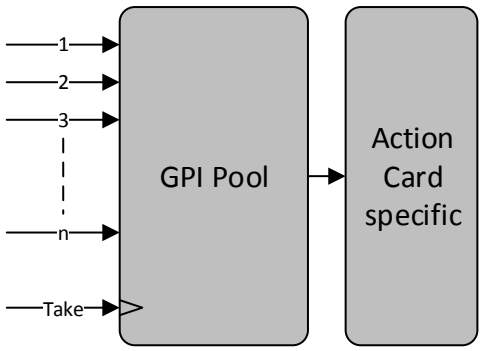

Take

The GPI contacts not only can be used as GPI contact but also can be assigned as Take contact. The menu item is called `GPI_n-Take`. Where n is the amount of GPI pools in the product. Every pool can only have one Take contact. There will be no restrictions in assigning the contact to a GPI pool and Take function at the same time. The values will be 1 to x. When assigning a take pin to a pool set to `Prio_Latched` mode, the pool will behave the same as when set to `Prio` mode with a take pin assigned. This is because the take pin overrules the latched functionality of the `Prio_Latched` mode.

Debounce time

The input contacts need to be debounced to assure signal stability. The debounce time can be set in the `GPI-DebounceTime` object in a range of `1-40` ms. This value will be applied to all contacts. In software implementations setting a custom debounce time is not supported due to technical limitations.

Pool Mode: GPI

Every GPI pool can be set up to process the input contacts in three ways. This setting is called `GPI_n-Mode` and can be set into priority `(Prio)`, priority latched (`Prio_Latched`) and `Binary` mode. N is defined as a character in the range from A-Z depending on the number of pools. The default output value of a pool is always 0. This translates to preset 1 in Axon products.
In priority mode, the contact which has the highest priority defines the pool value. Priority is defined as ranging from the least significant bit (low priority) to the most significant bit (high priority). This is essentially a one-hot coding of preset values.
If a pool has three contacts connected and all inputs are high, the output value of the pool will be 3. Another example is when three contacts are connected to a pool with the first and third contact are low and the second contact is high the output value is 1.

Input 1	Input 2	Input 3	Pool value	Preset nr
0	0	0	1	1
1	0	0	1	1
X	1	0	2	2
X	X	1	3	3

Table 1 Pool value in prio and prio_latched mode

In binary mode, the contacts are interpreted as a binary value of concatenated contacts available in a pool. E.g. assigning two contacts to a GPI pool translates to the following output values.

Input 1	Input 2	Pool value	Preset nr
0	0	1	1
0	1	2	2
1	0	3	3
1	1	4	4

Table 2 Pool value in binary mode

Pool Mode: GPO

Every GPO pool can be set up to process the input values in two ways. This setting is called `GPO_n-Mode` and can be set into Priority (`Prio`) or `Binary` mode. N is defined as a character in the range from A-Z depending on the number of pools. The default output value of a pool is always 0.

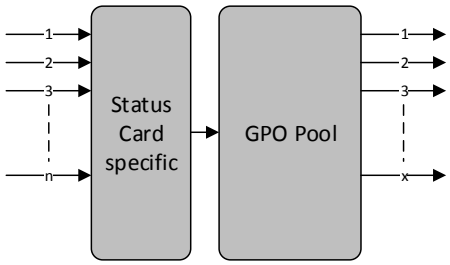

Every GPO pool can be set up to process the input values in two ways. This setting is called `GPO_n-Mode` and can be set into Priority (`Prio`) or `Binary` mode. N is defined as a character in the range from A-Z depending on the number of pools. The default output value of a pool is always 0.

In priority mode, the value is translated to one-hot encoding on the output contacts. See table below.

Preset nr	Output 1	Output 2	Output 3	Pool value
1	1	0	0	1
2	0	1	0	2
3	0	0	1	3

Table 3 Pool value in priority mode

In binary mode the input value is exposed on the output contacts as binary value.

Preset nr	Output 1	Output 2	Pool value
1	0	0	1
2	0	1	2
3	1	0	3
4	1	1	4

Table 4 Pool value in binary mode

`GPO_n-Source` is the setting with which a function is assigned to a GPO pool. E.g. when the output format needs to be reflected on the output contacts, this setting may be set to something like `Output_Format`. The contents of the enumeration are product specific.

Statuses: Contact direction

This status `Contact-Dir` shows the direction of the physical contacts. The value will be presented as a concatenated string containing one character per pin: `I` for Input, `O` for output and _ for unassigned contacts.

Statuses: Contact status

`Contact-Status` shows the current logical value of the physical contacts, formatted as a concatenated string containing one character per pin: `1` for asserted, `0` for non-asserted and _ for unassigned.

Statuses: GPI status

`GPI_n` is an integer which reflects the value of the pool.

Statuses: GPO status

`GPO_n` is an integer which reflects the value of the pool.

Example 1: Two pools in binary mode

We are controlling the up-converter presets using Pool A (`Up_CtrlA` set to `GPI_A`) and the output mode setting using Pool B (`Out-mode-Ctrl` set to `GPI_B`). Both pools are working in priority mode. The GPI's need to be set-up in the following way:

- Set GPI_A-Mode to Prio
- Set Contact_1 to GPI_A
- Set Contact_2 to GPI_A
- Set Contact_3 to GPI_A
- Set Contact_4 to GPI_A
- Set GPI_B-Mode to Prio
- Set Contact_5 to GPI_B

Pool A now consists of GPI 1, GPI 2, GPI 3 and GPI 4 in a priority mode, controlling the up-converter preset. Pool B consists only of GPI 5 (also in priority mode), controlling the output mode setting.Pool A now works as follows:

Contact_1 status	Contact_2 status	Contact_3 status	Contact_4 status	GPI_A value
0	0	0	0	Up-conv Preset 1
1	0	0	0	Up-conv Preset 1
0	1	0	0	Up-conv Preset 2
0	0	1	0	Up-conv Preset 3
0	0	0	1	Up-conv Preset 4
0	1	1	0	Up-conv Preset 3 (highest gets priority)
1	1	1	1	Up-conv Preset 4 (highest gets priority)

Table 5 Pool value in priority mode

Pool B now works as follows:

Contact_5 status	GPI_B value
0	A out only
1	B out only

Table 6 Pool value in priority mode

Example 2: One pool in binary mode and one in priority mode

Let's say we would like to control the GXG up-converter presets using Pool A (`Up_CtrlA` set to `GPI_A`) in binary mode and the audio presets using Pool B (`Audio_Ctrl` set to `GPI_B`) in priority mode. We could do the following:

- Set GPI_A-Mode to binary
- Set Contact_1 to GPI_A
- Set Contact_2 to GPI_A
- Set GPI_A-Take to Contact_3
- Set GPI_B-Mode to Prio
- Set Contact_4 to GPI_B
- Set Contact_5 to GPI_B

Pool A now consists of GPI 1, GPI 2 and GPI 3 (as take) in binary mode, controlling the up-converter preset. Pool B now consists of GPI 4 and GPI 5 in priority mode, controlling the audio presets. Pool A now works as follows:

Contact _1 status	Contact _2 status	Preset value (when Contact_3 (take) is closed)
0	0	Up-converter Preset 1
1	0	Up-converter Preset 2
0	1	Up-converter Preset 3
1	1	Up-converter Preset 4

Table 7 Pool value in binary mode

Pool B now works as follows:

Contact _4 status	Contact _5 status	Preset value
0	0	Audio Preset 1
1	0	Audio Preset 1
0	1	Audio Preset 2
1	1	Audio Preset 2 (because highest gets priority)

Table 8 Pool value in priority mode

Example 3: Two pools in priority mode

Let's say we would like to control the up-converter presets using Pool A (`Up_CtrlA` set to `GPI_A`) in priority mode and the audio presets using Pool B (`Audio_Ctrl` set to `GPI_B`) in priority mode. We could do the following settings:

- Set GPI_A-Mode to Prio
- Set Contact_1 to GPI_A
- Set Contact_2 to GPI_A
- Set GPI_B-Mode to Prio
- Set Contact_3 to GPI_B
- Set Contact_4 to GPI_B

Pool A now consists of GPI 1 and GPI 2 in a priority mode, controlling the Up converter preset. Pool B now consists of GPI 3 and GPI 4 in a priority mode, controlling the audio presets.

Pool A now works as follows:

Contact_1 status	Contact_2 status	Preset value
0	0	Up-converter Preset 1
1	0	Up-converter Preset 1
0	1	Up-converter Preset 2
1	1	Up-converter Preset 2 (because highest gets priority)

Table 9 Pool value in priority mode

Pool B now works as follows:

Contact_3 status	Contact_4 status	Preset value
0	0	Audio Preset 1
1	0	Audio Preset 1
0	1	Audio Preset 2
1	1	Audio Preset 2 (because highest gets priority)

Table 10 Pool value in priority mode

This product contains open-source software

This product contains open-source software licensed under the GNU Public License (GPL). A copy of the GNU Public License is included below. Under this license you are eligible to receive a copy of the source code of this software including any changes.

Axon Digital Design shall provide the source code on request either through physical distribution or electronic communication. For physical distribution you may be charged a fee that covers distribution costs. This offer is valid up to three years after date of purchase. Please direct your request to the support department of Axon Digital Design.

Axon Digital Design supports open-source software by participating in the development of open-source projects or submitting improvements to these projects. For more information see http://opensource.axon.tv/

GNU Public License version 2

TERMS AND CONDITIONS FOR COPYING, DISTRIBUTION AND MODIFICATION

0. This License applies to any program or other work which contains a notice placed by the copyright holder saying it may be distributed under the terms of this General Public License. The “Program”, below, refers to any such program or work, and a “work based on the Program” means either the Program or any derivative work under copyright law: that is to say, a work containing the Program or a portion of it, either verbatim or with modifi cations and/or translated into another language. (Hereinafter, translation is included without limitation in the term “modifi cation”.) Each licensee is addressed as “you”.

Activities other than copying, distribution and modifi cation are not covered by this License; they are outside its scope. The act of running the Program is not restricted, and the output from the Program is covered only if its contents constitute a work based on the Program (independent of having been made by running the Program). Whether that is true depends on what the Program does.

1. You may copy and distribute verbatim copies of the Program’s source code as you receive it, in any medium, provided that you conspicuously and appropriately publish on each copy an appropriate copyright notice and disclaimer of warranty; keep intact all the notices that refer to this License and to the absence of any warranty; and give any other recipients of the Program a copy of this License along with the Program.

You may charge a fee for the physical act of transferring a copy, and you may at your option offer warranty protection in exchange for a fee.

2. You may modify your copy or copies of the Program or any portion of it, thus forming a work based on the Program, and copy and distribute such modifications or work under the terms of Section 1 above, provided that you also meet all of these conditions:

a) You must cause the modified files to carry prominent notices stating that you changed the fi les and the date of any change.
b) You must cause any work that you distribute or publish, that in whole or in part contains or is derived from the Program or any part thereof, to be licensed as a whole at no charge to all third parties under the terms of this License.
c) If the modified program normally reads commands interactively when run, you must cause it, when started running for such interactive use in the most ordinary way, to print or display an announcement including an appropriate copyright notice and a notice that there is no warranty (or else, saying that you provide a warranty) and that users may redistribute the program under these conditions, and telling the user how to view a copy of this License. (Exception: if the Program itself is interactive but does not normally print such an announcement, your work based on the Program is not required to print an announcement.)

These requirements apply to the modified work as a whole. If identifiable sections of that work are not derived from the Program, and can be reasonably considered independent and separate works in themselves, then this License, and its terms, do not apply to those sections when you distribute them as separate works. But when you distribute the same sections as part of a whole which is a work based on the Program, the distribution of the whole must be on the terms of this License, whose permissions for other licensees extend to the entire whole, and thus to each and every part regardless of who wrote it.

Thus, it is not the intent of this section to claim rights or contest your rights to work written entirely by you; rather, the intent is to exercise the right to control the distribution of derivative or collective works based on the Program.

In addition, mere aggregation of another work not based on the Program with the Program (or with a work based on the Program) on a volume of a storage or distribution medium does not bring the other work under the scope of this License.

3. You may copy and distribute the Program (or a work based on it, under Section 2) in object code or executable form under the terms of Sections 1 and 2 above provided that you also do one of the following:

a) Accompany it with the complete corresponding machine-readable source code, which must be distributed under the terms of Sections 1 and 2 above on a medium customarily used for software interchange; or,
b) Accompany it with a written offer, valid for at least three years, to give any third party, for a charge no more than your cost of physically performing source distribution, a complete machine-readable copy of the corresponding source code, to be distributed under the terms of Sections 1 and 2 above on a medium customarily used for software interchange; or,

c) Accompany it with the information you received as to the offer to distribute corresponding source code. (This alternative is allowed only for noncommercial distribution and only if you received the program in objects code or executable form with such an offer, in accord with Subsection b above.)

The source code for a work means the preferred form of the work for making modifi cations to it. For an executable work, complete source code means all the source code for all modules it contains, plus any associated interface defi nition fi les, plus the scripts used to control compilation and installation of the executable. However, as a special exception, the source code distributed need not include anything that is normally distributed (in either source or binary form) with the major components (compiler, kernel, and so on) of the operating system on which the executable runs, unless that component itself accompanies the executable.

If distribution of executable or object code is made by offering access to copy from a designated place, then offering equivalent access to copy the source code from the same place counts as distribution of the source code, even though third parties are not compelled to copy the source along with the object code.

4. You may not copy, modify, sublicense, or distribute the Program except as expressly provided under this License. Any attempt otherwise to copy, modify, sublicense or distribute the Program is void, and will automatically terminate your rights under this License. However, parties who have received copies, or rights, from you under this License will not have their licenses terminated so long as such parties remain in full compliance.

5. You are not required to accept this License, since you have not signed it. However, nothing else grants you permission to modify or distribute the Program or its derivative works. These actions are prohibited by law if you do not accept this License. Therefore, by modifying or distributing the Program (or any work based on the Program), you indicate your acceptance of this License to do so, and all its terms and conditions for copying, distributing or modifying the Program or works based on it.

6. Each time you redistribute the Program (or any work based on the Program), the recipient automatically receives a license from the original licensor to copy, distribute or modify the Program subject to these terms and conditions. You may not impose any further restrictions on the recipients' exercise of the rights granted herein. You are not responsible for enforcing compliance by third parties to this License.

7. If, as a consequence of a court judgment or allegation of patent infringement or for any other reason (not limited to patent issues), conditions are imposed on you (whether by court order, agreement or otherwise) that contradict the conditions of this License, they do not excuse you from the conditions of this License. If you cannot distribute so as to satisfy simultaneously your obligations under this License and any other pertinent obligations, then as a consequence you may not distribute the Program at all. For example, if a patent license would not permit royalty-free redistribution of the Program by all those who receive copies directly or indirectly through you, then the only way you could satisfy both it and this License would be to refrain entirely from distribution of the Program.

If any portion of this section is held invalid or unenforceable under any particular circumstance, the balance of the section is intended to apply and the section as a whole is intended to apply in other circumstances.

It is not the purpose of this section to induce you to infringe any patents or other property right claims or to contest validity of any such claims; this section has the sole purpose of protecting the integrity of the free software distribution system, which is implemented by public license practices. Many people have made generous contributions to the wide range of software distributed through that system in reliance on consistent application of that system; it is up to the author/donor to decide if he or she is willing to distribute software through any other system and a licensee cannot impose that choice.

This section is intended to make thoroughly clear what is believed to be a consequence of the rest of this License.

8. If the distribution and/or use of the Program is restricted in certain countries either by patents or by copyrighted interfaces, the original copyright holder who places the Program under this License may add an explicit geographical distribution limitation excluding those countries, so that distribution is permitted only in or among countries not thus excluded. In such case, this License incorporates the limitation as if written in the body of this License.

9. The Free Software Foundation may publish revised and/or new versions of the General Public License from time to time. Such new versions will be similar in spirit to the present version, but may differ in detail to address new problems or concerns.

Each version is given a distinguishing version number. If the Program specifies a version number of this License which applies to it and "any later version", you have the option of following the terms and conditions either of that version or of any later version published by the Free Software Foundation. If the Program does not specify a version number of this License, you may choose any version ever published by the Free Software Foundation.

10. If you wish to incorporate parts of the Program into other free programs whose distribution conditions are different, write to the author to ask for permission. For software which is copyrighted by the Free Software Foundation, write to the Free Software Foundation; we sometimes make exceptions for this. Our decision will be guided by the two goals of preserving the free status of all derivatives of our free software and of promoting the sharing and reuse of software generally.

NO WARRANTY

11. BECAUSE THE PROGRAM IS LICENSED FREE OF CHARGE, THERE IS NO WARRANTY FOR THE PROGRAM, TO THE EXTENT PERMITTED BY APPLICABLE LAW. EXCEPT WHEN OTHERWISE STATED IN WRITING THE COPYRIGHT HOLDERS AND/OR OTHER PARTIES PROVIDE THE PROGRAM "AS IS" WITHOUT WARRANTY OF ANY KIND, EITHER EXPRESSED OR IMPLIED, INCLUDING, BUT NOT LIMITED TO, THE IMPLIED WARRANTIES OF MERCHANTABILITY AND FITNESS FOR A PARTICULAR PURPOSE. THE ENTIRE RISK AS TO THE QUALITY AND PERFORMANCE OF THE PROGRAM IS WITH YOU. SHOULD THE PROGRAM PROVE DEFECTIVE, YOU ASSUME THE COST OF ALL NECESSARY SERVICING, REPAIR OR CORRECTION.

12. IN NO EVENT UNLESS REQUIRED BY APPLICABLE LAW OR AGREED TO IN WRITING WILL ANY COPYRIGHT HOLDER, OR ANY OTHER PARTY WHO MAY MODIFY AND/OR REDISTRIBUTE THE PROGRAM AS PERMITTED ABOVE, BE LIABLE TO YOU FOR DAMAGES, INCLUDING ANY GENERAL, SPECIAL, INCIDENTAL OR CONSEQUENTIAL DAMAGES ARISING OUT OF THE USE OR INABILITY TO USE THE PROGRAM (INCLUDING BUT NOT LIMITED TO LOSS OF DATA OR DATA BEING RENDERED INACCURATE OR LOSSES SUSTAINED BY YOU OR THIRD PARTIES OR A FAILURE OF THE PROGRAM TO OPERATE WITH ANY OTHER PROGRAMS), EVEN IF SUCH HOLDER OR OTHER PARTY HAS BEEN ADVISED OF THE POSSIBILITY OF SUCH DAMAGES.