INSTALLATION & CONFIGURATION MANUAL

G/H/SDK100

DUAL BACKGROUND INPUT 3GB/S, HD, SD SDI DOWNSTREAM KEYER WITH PREVIEW OUTPUT

SYNAPSE

Copyright

Disclaimer

The information in this manual is furnished for informational use only and subject to change without notice. While every effort has been made to ensure that the information contained in this user manual is accurate, up-to-date and reliable, EVS Broadcast Equipment cannot be held responsible for inaccuracies or errors that may appear in this publication.

Improvement Requests

Your comments will help us improve the quality of the user documentation. Do not hesitate to send improvement requests, or report any error or inaccuracy on this user manual by e-mail to doc@evs.com.

Regional Contacts

The address and phone number of the EVS headquarters are usually mentioned in the **Help > About** menu in the user interface.

You will find the full list of addresses and phone numbers of local offices either at the end of this user manual (for manuals on hardware products) or on the EVS website on the following page: http://www.evs.com/contacts.

User Manuals on EVS Website

The latest version of Media Infrastructure manuals are available at: https://mi-sftp.evs.com/
The user manuals for other EVS products can be found at the EVS download center, on the following webpage: https://www.evs.com/en/download-area.

WARNING: TO REDUCE THE RISK OF FIRE OR ELECTRICAL SHOCK, DO NOT EXPOSE THIS APPLIANCE TO RAIN OR MOISTURE

● ALWAYS disconnect your entire system from the AC mains before cleaning any component. The product frame (SFR18 or SFR04) must be terminated with three-conductor AC mains power cord that includes an earth ground connection. To prevent shock hazard, all three connections must always be used.
● NEVER use flammable or combustible chemicals for cleaning components.
● NEVER operate this product if any cover is removed.
● NEVER wet the inside of this product with any liquid.
● NEVER pour or spill liquids directly onto this unit.
● NEVER block airflow through ventilation slots.
● NEVER bypass any fuse.
● NEVER replace any fuse with a value or type other than those specified.
● NEVER attempt to repair this product. If a problem occurs, contact your local EVS distributor.
● NEVER expose this product to extremely high or low temperatures.
● NEVER operate this product in an explosive atmosphere.

Warranty: EVS warrants their products according to the warranty policy as described in the general terms. That means that EVS Broadcast Equipment SA can only warrant the products as long as the serial numbers are not removed.

Date created: 26-01-2009
Date last revised: 23-03-2011

This product complies with the requirements of the product family standards for audio, video, audio-visual entertainment lighting control apparatus for professional use as mentioned below.

CE	EN60950	Safety
	EN55103-1: 1996	Emission
	EN55103-2: 1996	Immunity

EVS Broadcast Equipment G/H/SDK100 FC Tested To Comply With FCC Standards FOR HOME OR OFFICE USE	This device complies with part 15 of the FCC Rules Operation is subject to the following two conditions: (1) This device may cause harmful interference, and (2) This device must accept any interference received, including interference that may cause undesired operation.

Table of Contents

1 Introduction to Synapse

An Introduction to Synapse

Synapse is a modular system designed for the broadcast industry. High density, intuitive operation and high quality processing are key features of this system. Synapse offers a full range of converters and processing modules. Please visit the EVS Broadcast Equipment SA Website at http://www.evs.com to obtain the latest information on our new products and updates.

Local Control Panel

The local control panel gives access to all adjustable parameters and provides status information for any of the cards in the Synapse frame, including the Synapse rack controller. The local control panel is also used to back-up and restore card settings. Please refer to the RRC18, RRC10, RRC04, RRS18 and RRS04 manuals for a detailed description of the local control panel, the way to set-up remote control over IP and for frame related settings and status information.

Remote Control Capabilities

The remote control options are explained in the rack controller (RRC18/RRC10/RRC04/RRS18/RRS04) manual. The method of connection to a computer using Ethernet is described in the RRC/RRS manual.

! **CHECK-OUT:** "EVS CORTEX" SOFTWARE WILL INCREASE SYSTEM FLEXIBILITY OF ONE OR MORE SYNAPSE FRAMES

Although not required to use Cortex with a Synapse frame, you are strongly advised to use a remote personal computer or laptop PC with Synapse Cortex installed, as this increases the ease of use and understanding of the modules.

2 Unpacking and Placement

Unpacking

The EVS Synapse card must be unpacked in an anti-static environment. Care must be taken NOT to touch components on the card – always handle the card carefully by the edges. The card must be stored and shipped in anti-static packaging. Ensuring that these precautions are followed will prevent premature failure from components mounted on the board.

Placing the card

The EVS Synapse card can be placed vertically in an SFR18 frame or horizontally in an SFR04 frame. Locate the two guide slots to be used, slide in the mounted circuit board, and push it firmly to locate the connectors.

Correct insertion of card is essential as a card that is not located properly may show valid indicators, but does not function correctly.

NOTE: On power up all LED's will light for a few seconds, this is the time it takes to initialise the card.

3 A Quick Start

When Powering-up

On powering up the Synapse frame, the card set will use basic data and default initialisation settings. All LED's will light during this process. After initialisation, several LED's will remain lit – the exact number and configuration is dependant upon the number of inputs connected and the status of the inputs.

Default settings

In its default condition the HDK100 acts as a back-up switcher with only the carrier detector active.

Changing settings and parameters

The front panel controls or the EVS Cortex can be used to change settings. An overview of the settings can be found in chapter 5, 6 and 7 of this manual.

Front Panel Control

Front Panel Display and Cursor

```
[No Alarms]
```

Settings are displayed and changed as follows;

Use the cursor 'arrows' on the front panel to select the menu and parameter to be displayed and/or changed.

Press ►	To go forward through the menu structure.
Press ◄	To go back through the menu structure.
Press ▲	To move up within a menu or increase the value of a parameter.
Press ▼	To move down through a menu or decrease the value of a parameter.

NOTE: Whilst editing a setting, pressing ► twice will reset the value to its default.

Example of changing parameters using front panel control

With the display as shown below

```
RRC18 [Select Card]
>S01=SFS10
```

Pressing the ► selects the SFS10 in frame slot 01.

The display changes to indicate that the SFS10 has been selected. In this example the `Settings` menu item is indicated.

```
SFS10 [Select Menu]
>Settings
```

Pressing the ► selects the menu item shown, in this example `Settings`.

(Pressing ▲ or ▼ will change to a different menu eg `Status, Events)`.

The display changes to indicate that the SFS10 `Settings` menu item `SDI-Format` has been selected and shows that it current setting is `Auto`.

```
SFS10 [Settings]
>SDI-Format=Auto
```

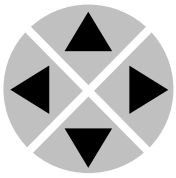

Pressing the ► selects the settings item shown, in this example `SDI-Format.`

(Pressing ▲ or ▼ will change to a different setting, eg `Mode, H-Delay)`.
The display changes to indicate that the SFS10 `Edit Setting` menu item `SDI-Format` has been selected.

```
SFS10 Edit Setting]
SDI-Format>Auto
```

To edit the setting of the menu item press ▲ or ▼.

All menu items can be monitored and/or changed in this way. Changing a setting has an immediate effect.

EVS Cortex Software

EVS Cortex can be used to change the settings of Synapse modules from a PC, either locally or remotely. The software enables communication based on TCP/IP between the Setup PC and Synapse frames/modules.

Each Synapse frame is addressed through its rack controller's unique IP address, giving access to each module, its menus and adjustment items. EVS Cortex has access to data contained within the Synapse module and displays it on a GUI. The software has an intuitive structure following that of the module that it is controlling.

For operation of EVS Cortex, please refer to the Cortex manual.

Menu Structure Example

Slot	Module		Item		Parameter		Setting
▲							
▲							
S02			Identity				
▲			▲				
S01	SFS10	▶	Set-tings	▶	Standard_dig	▶	Auto
▼			▼		▼		▼
S00	RRC18		Status		Mode		625
			▼		▼		▼
			Events		Ref-Input		525
					▼		
					H-Delay		
					▼		
					▼		

NOTE: Further information about Front Panel Control and EVS Cortex can be obtained from the RRC and RRS operational manuals and the Cortex help files.

4 The G/H/SDK100 Card

Introduction

The G/H/SDK100 is a Keyer module for the Synapse system. This module has 4 individual triple rate (SD, HD, 3Gb/s) inputs and 4 triple rate outputs. A local Ethernet connection is placed for controlling the end product. Depending on the connector panel you have either Ethernet or GPI control:

- GPI with BPH17 or BHX17
- Ethernet with BPH19 or BHX19 (or fast updates)

Features

- 2 background inputs (selectable, mixable)
- Key input
- Fill input
- Self key
- The 4th output can be software configured for any output task: program, preview or modified key output.
- key gain, slice level, transparency (with definable) modified key monitor output)
- Preview output for content verification prior to go on air
- Transparent for 16 channels of embedded audio
- Transparent for all ANC data
- Compatible with:
  - 270 Mbit/s (SMPTE 259M) 50 / 59.94Hz
  - 1485 Mbit/s (SMPTE 292M) 50 / 59.94Hz
  - 2970 Mbit/s (SMPTE 424M) =3Gb/s 50 / 59.94Hz

Applications

The G/H/SDK100 can be used as a downstream keyer for external logo generated keying and other graphical overlay keying.

Block schematic

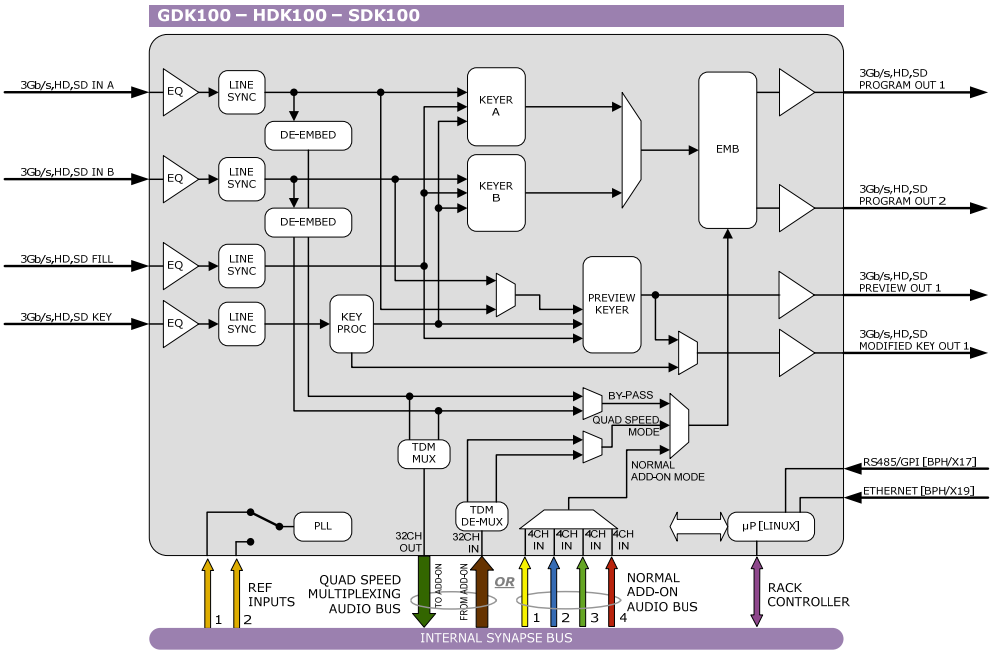

Important notice about input specifications

The G/H/SDK100 does not have a frame synchroniser built in. Therefore it is up to the system engineer to synchronize the inputs before feeding them to the keyer card. All inputs have to fall within the following specifications:

1080p:
1000 pixels (6.756 µs) in front or behind of the reference (which is fed to the G/H/SDK card via the rack controller).

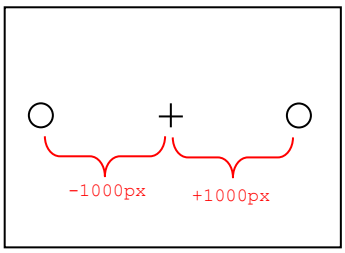

1080i:
1000 pixels (13.5 µs) in front or behind of the reference (which is fed to the G/H/SDK card via the rack controller).

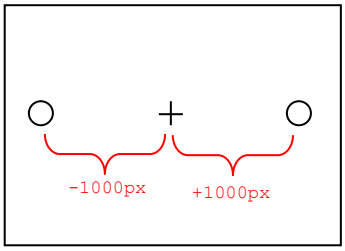

720p:
700 pixels (9.42 µs) in front or behind of the reference (which is fed to the G/H/SDK card via the rack controller).

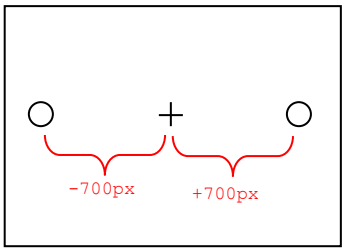

SD:
400 pixels (29.62 µs) in front or behind of the reference (which is fed to the G/H/SDK card via the rack controller).

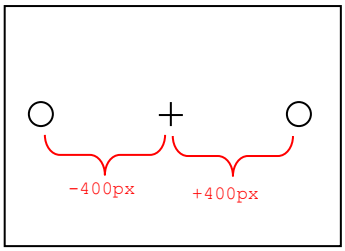

Important notice about output delays

The keyer card adds a bit of delay to the outputs in comparison to the inputs. These are the measured delays per format:

1080p:
Not measured.

1080i:
2 lines delayed, ±11,89 µs

720p:
3 lines delayed, ±8,46 µs

SD:
1 line delayed, ±23,9 µs

5 Settings Menu

Introduction

The settings menu displays the current state of each G/H/SDK100 setting and allows you to change or adjust it.

Settings can be changed using the front panel of the Synapse frame (SFR18, SFR08 SFR04) or with Cortex. Also the SCP08 control can be used. Please refer to chapter 3 for information on the Synapse front panel control and Cortex.

CONTROL

Inp_Format

With `Inp-Format` you can set what the input format is. Possible settings are:

- `1080p60`, `1080p50` (GDK100 only)
- `1080i60`, `1080i50` (G/HDK100 only)
- `720p60`, `720p50` (G/HDK100 only)
- `SD525`, `SD625`

Default setting for this item is `Auto`

Lock-Mode

`Lock-Mode` determines whether the card is locked to reference `Ref1` or `Ref2`. By default it is set to `Ref1`.

Ref-Type

The G/H/SDK100 is able to lock on to a HD sync 600mV nominal TRI-level as described in the SMPTE 274M and 296m spec. A SD sync 300 mV nominal BI-level sync can also be used. `Ref-Type` sets the type of reference to `TRI-level` or `BI-level`.

The default setting is `Bi-level`

Add_on

With this setting you can set the Synapse Add-on bus mode to Quad speed audio (`Quad_audio`) or to `Normal` mode. Default is `Quad_Audio`. For a detailed description of the quad speed audio mode, refer to appendix 2.

GPI-Ctrl

`GPI_Ctrl` can be set to `Latch`, `Non_Latch` or `Seperated`. `Latch` when a contact is closed momentarily (edge triggered), `non_latch` when a contact is closed all the time (level triggered). Set to `Latch` or `non-Latch` will trigger both the preview output and the program output. Set to `Seperated` GPI 0 triggers the program output and GPI 1 triggers the preview output, both in a

latching mode. Default is `Latch`. Refer to chapter 10 for the GPI pin assignment.

Output 4

The G/H/SDK100 has a fourth SDI output which can be user defined in what the output is. You can choose to make this a third `Program` output, a second `Preview` output, or an output with a `Modified key`. By default it is set to `Program`.

KEYER OPTIONS

Keyer

With this setting you decide how you want the keyer to work. Choices are:

- `Key_input`: Use the key as inserted on the key-input.
- `Self_key`: Key using the signal from the fill input, without making use of a key-input (hard keying).
- `Key_invert`: Use the key as inserted on the key-input, but inverted.
- `Forces_shape`: This mode will only fade down the background with the corresponding key level and will insert the fill signal without changing this at all

Prgm-Key

This item sets the key `on` or `off` for the program outputs. Set to `GPI` will enable the program keyer to be switched on or off by GPI-0 closures (refer to chapter 10: GPI pinning). Default is `On`.

Prgm_Key_in

With this setting you can select how long the fade in of the program-key should be when triggered. This can be between 0 frames and 200 frames. Default is 0 frames.

Prgm_Key_out

With this setting you can select how long the fade out of the program-key should be when a new key is triggered. This can be between 0 frames and 200 frames. Default is 0 frames.

Prev-Key

With this item you can set the key `on` or `off` on the preview output(s). Set to `GPI` will enable the preview keyer to be switched on or off by GPI-1 closures (refer to chapter 10: GPI pinning). Default is `Off`.

Prev_Key_in

With this setting you can select how long the fade in of the preview-key should be when triggered. This can be between 0 frames and 200 frames. Default is 0 frames.

Prev_Key_out

With this setting you can select how long the fade out of the preview-key should be when a new key is triggered. This can be between 0 frames and 200 frames. Default is 0 frames.

Program_out

With `Program_out` you set either `SDI-1` or `SDI-2` as background source on the program output. Can also be set to `GPI`, in which case `Program_out` is switched between `SDI-1` and `SDI-2` by GPI-3 closures (refer to chapter 10: GPI pinning). Default is `SDI-1`.

Preview_out

With `Preview_out` you set either `SDI-1` or `SDI-2` as background source on the preview output. Can also be set to `GPI`, in which case `Preview_out` is switched between `SDI-1` and `SDI-2` by GPI-3 closures (refer to chapter 10: GPI pinning). When both `Program_out` and `Preview_out` are set to GPI, both settings will be switched when GPI-3 is closed. Default is `SDI-2`.

Transparency

With this setting you can increase or decrease the transparency of the fill image. Can be set between 0% and 199%. Default is 100%. The following graph shows how the `transparency` setting modifies the key (with `Keyer` set to `Key_input`).

Transparency setting visualised:

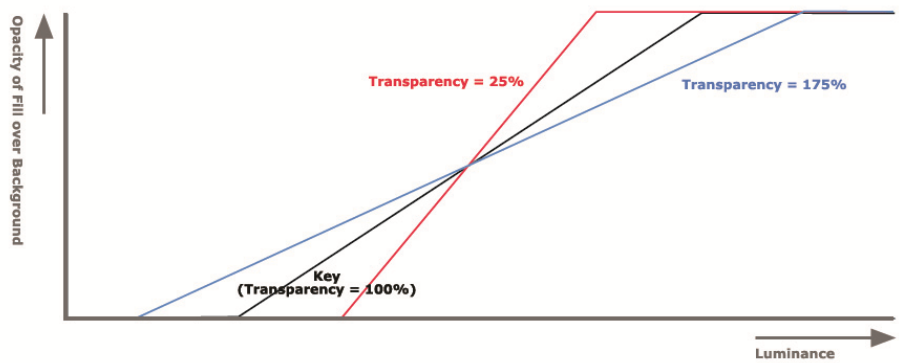

Slice_level

With this setting you set a point in percentage in the key where the fill input should be cut off entirely. The default for this setting is 0%. The following graph shows how `Slice_level` modifies the key (with `Keyer` set to `Key_input`).

Slice_level setting visualised:

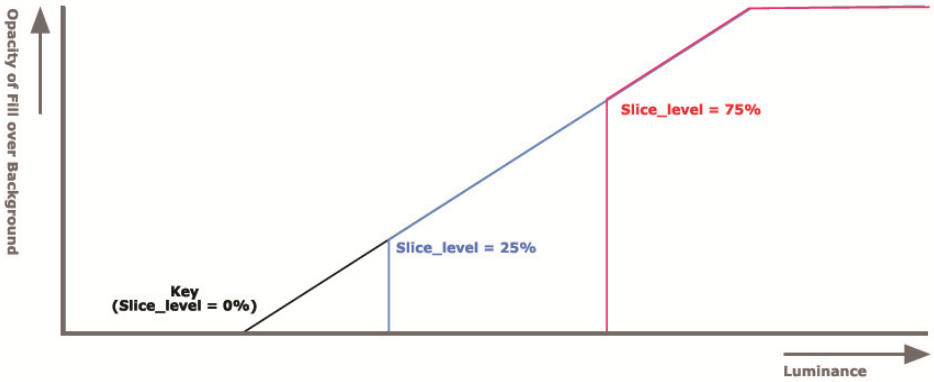

KEY_win_H_Start

With the `KEY_win` settings you can set a window in the input signal where the key should be processed only. With `H_Start` you set the horizontal start point of this window (See appendix 1: `Key_win` settings visualized). By default it's set to 0%.

KEY_win_H_Stop

With the `KEY_win` settings you can set a window in the input signal where the key should be processed only. With `H_Stop` you set the horizontal end point of this window (See appendix 1: `Key_win` settings visualized). By default its set to 100%.

KEY_win_V_Start

With the `KEY_win` settings you can set a window in the input signal where the key should be processed only. With `V_Start` you set the vertical start point of this window (See appendix 1: `Key_win` settings visualized). By default it's set to 0%.

KEY_win_V-Stop

With the `KEY_win` settings you can set a window in the input signal where the key should be processed only. With `V_Stop` you set the vertical end point of this window (See appendix 1: `Key_win` settings visualized). By default its set to 100%.

Audio_A

With this setting you can set the source of the audio on channel A. Can be `SDI1` (SDI input 1) `SDI2` (SDI input 2), `AddOnA` (first group of 16 channels on the AddOn bus) or `AddOnB` (second group of 16 channel on the AddOn bus). Default is `SDI1`.

Audio_B

With this setting you can set the source of the audio on channel B. Can be `SDI1` (SDI input 1) `SDI2` (SDI input 2), `AddOnA` (first group of 16 channels on the AddOn bus) or `AddOnB` (second group of 16 channel on the AddOn bus). Default is `SDI2`.

	EMBEDDER
Emb_A_Sel ~ Emb_D-Sel	With these items you can set the embedder to either insert the audio into the corresponding group (fixed for embedder A, B, C and D to respectively group 1, 2 3 and 4) or to disable the embedder. By default it's set to its corresponding group.
	DE-EMBEDDER
Phase_Rst	If this setting is set to *On*, the card ensures audio-phase alignment between multiple audio channels and audio groups, which is necessary for multi-channel (surround) purposes. If errors in the signal-chain occur the de-embedder blocks reset synchronously to maintain audio-phase-alignment. If this setting is set to *Off*, the card *eats-all* audio including errors. Even if there are DBN/ANC/ECC or channel-sequence errors, the de-embedder will pass them. Be aware that audio-phase-alignment between multiple audio channels and audio groups can not be maintained if this setting is set to *Off*. **Note:** This setting can be helpful to solve problems in the field using equipment which doesn't follow the standards correctly.
	NETWORK
IP_Conf0	With this setting you can let the card obtain an IP address automatically via `DHCP`, or appoint a `manual` set IP address. By default this setting is set to `Manual`.
mIP0	When `IP_Conf0` is set to `manual`, you can type in the preferred IP address here. By default it is set to 172.16.1.2
mNM0	With `IP_Conf0` set to `manual`, with this setting you can set a Netmask.

	Default is 255.255.0.0
mGW0	With `IP_Conf0` set to `manual`, this setting let you set a Standard Gateway. Default is set to 172.16.0.1
NetwPrefix0	Here you can set the proper network prefix if required.

6 Status Menu

Introduction

The status menu indicates the current status of each item listed below.

sInp1

This status item indicates the presence and format of a valid signal in input 1. This is displayed as:

- 1080p60
- 1080p50
- 1080i60
- 1080i50
- 1080p30
- 1080p25
- 1080p24
- 1035i60
- 720p60
- 720p50
- 720p30
- 720p25
- 720p24
- SD525
- SD625
- NA

sInp2

This status item indicates the presence and format of a valid signal in input 2. This is displayed as listed under sInp1.

sInp3

This status item indicates the presence and format of a valid signal in input 3. This is displayed as listed under sInp1.

sInp4

This status item indicates the presence and format of a valid signal in input 4. This is displayed as listed under sInp1.

AudioA-Present

This item displays the present audio groups on input A. This is displayed as '_____' when no audio is available and as '1234' when all audio groups are present. '1_3_' for instance displays that there's audio available in groups 1 and 3.

AudioB-Present

This item displays the present audio groups on input B. This is displayed as '_____' when no audio is available and as '1234' when all audio groups are present. '1_3_' for instance displays that there's audio available in groups 1 and 3.

GPI	This item displayed the currently active GPI.
Ref	This status item indicates if there is a valid reference `Present` or not (`NA`).
	NETWORK STATUS
IP_Addr0	This item displays the status of the IP address. It can be manual, DHCP asking, DHCP Leased or DHCP Infin.
MAC0	This item displays the MAC address of the card.
IP0	This item displays the current IP address of the card.
NM0	This item displays the current Netmask of the card.
GW0	This item displays the current Standard Gateway of the card.

7 Events Menu

Introduction

An event is a special message that is generated on the card asynchronously. This means that it is not the response to a request to the card, but a spontaneous message.

What is the Goal of an event?

The goal of events is to inform the environment about a changing condition on the card. A message may be broadcast to mark the change in status. The message is volatile and cannot be retrieved from the system after it has been broadcast. There are several means by which the message can be filtered.

Events

The events reported by the G/H/SDK100 are as follows;

Announcements

`Announcements` is not an event. This item is only used for switching the announcement of status changes on/off. 0=off, other =on

Input_A

Input_A can be selected between 0 .. 255. 0= no event, 1..255 is the priority setting.

Input_B

Input_B can be selected between 0 .. 255. 0= no event, 1..255 is the priority setting.

Ref-Status

Reference can be selected between 0 .. 255. 0= no event, 1..255 is the priority setting.

What information is available in an event?

The message consists of the following items;

1) A message string to show what has happened in text, for example: “INP_LOSS”, “REF_LOSS”, “INP_RETURN”.
2) A tag that also shows what happens, but with a predefined number: e.g. 1 (= loss of input), 2 (= loss of reference), 129(= 1+128 = return of input). For a list of these predefined tags see the table on the next page.
3) A priority that marks the importance of an event. This value is defined by the user and can have any value between 1 and 255, or 0 when disabled.
4) A slot number of the source of this event.

The Message String

The message string is defined in the card and is therefore fixed. It may be used in controlling software like Synapse Set-up to show the event.

The Tag

The tag is also defined in the card. The tag has a fixed meaning. When controlling or monitoring software should make decisions based on events, it is easier to use the tag instead of interpreting a string. The first implementation is the tag controlled switch in the GPI16.

In cases where the event marks a change to fault status (e.g. 1 for Loss of Input) the complement is marked by the tag increased by 128 (80_{hex}) (e.g. 129 (81_{hex}) for Return of Input).

Defining Tags

The tags defined for the HDK100 are:

Event Menu Item	Tag		Description
Announcements	0 or NA	0 or NA	Announcement of report and control values
Input_A	01_{hex}=INPA_LOSS	81_{hex}=INPA_RETURN	input A lost or returned
Input_B	02_{hex}=INPB_LOSS	82_{hex}= INPB_RETURN	input B lost or returned
Reference	03_{hex}=REF_LOSS	83_{hex}=REF_RETURN	reference lost or returned

The Priority

The priority is a user-defined value. The higher the priority of the alarm, the higher this value. Setting the priority to Zero disables the announcement of this alarm. Alarms with priorities equal or higher than the Error Threshold setting of the RRC will cause the error LED on the Synapse rack front panel to light.

The Address

Together with the message string or the tag, the slot number or address of the card is relevant to be able to assign the event to a certain card.

8 LED Indication

Error LED

The error LED indicates an error if the internal logic of the G/H/SDK100 card is not configured correctly or has a hardware failure.

Input_1 LED

This LED indicated the presence of a valid SDI video signal on input 1.

Input_2 LED

This LED indicated the presence of a valid SDI video signal on input 2.

Input_3 LED

This LED indicated the presence of a valid SDI video signal on input 3.

Input_4 LED

This LED indicated the presence of a valid SDI video signal on input 4.

ANC Data LED

Indicates the presence of embedded audio within the input signal.

Reference LED

Indicated the presence of a valid reference signal on the selected reference input connector (ref-1 or ref-2).

Data Error LED

This LED indicates a CRC error.

Connection LED

This LED illuminates after the card has initialized. The LED lights for 0.5 seconds every time a connection is made to the card.

Error LED

The error LED indicates an error if the internal logic of the card is not configured correctly or has a hardware failure.

9 Block Schematics

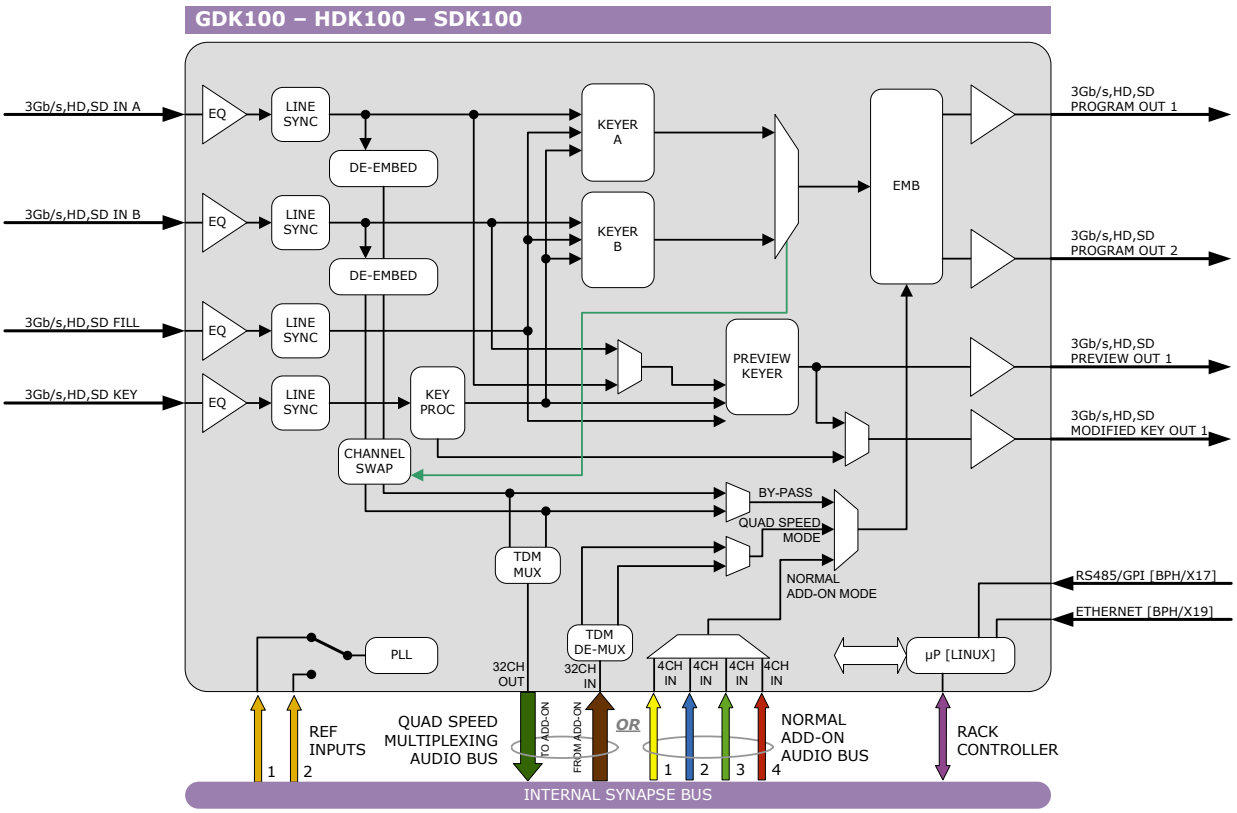

10 Connector Panels

The G/H/SDK100 can be used with the BPH17 or the BPH19. The following table displays the pin-out of these backpanels in combination with the card.

	BPH17	BPH19
3Gb/s, HD, SD background input A		
3Gb/s, HD, SD background input B		
3Gb/s, HD, SD program output 1		
3Gb/s, HD, SD program output 2		
GPI/RS485 input (BPH17) ethernet (BPH19)		
3Gb/s, HD, SD Preview output		
3Gb/s, HD, SD output 4		
3Gb/s, HD, SD Fill input		
3Gb/s, HD, SD key input		

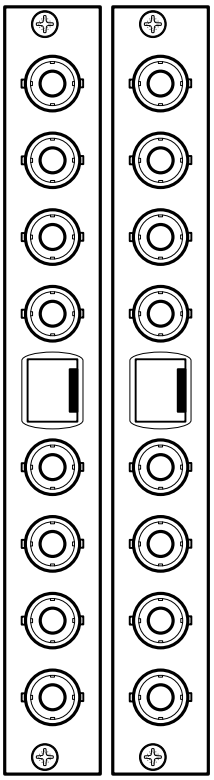

!Unused inputs and outputs must be terminated with the correct impedance!

GPI pinning

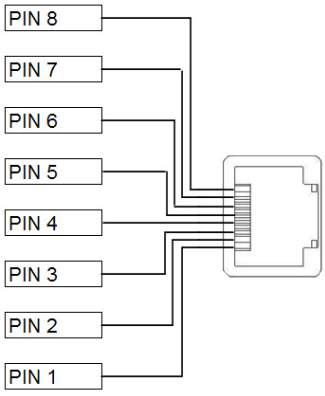

PIN 1	GPI 0
PIN 2	GPI 1
PIN 3	RS485 TXA
PIN 4	RS485 RXA
PIN 5	RS485 RXB
PIN 6	RS485 TXB
PIN 7	GPI 3
PIN 8	GND

Appendix 1

KEY_win settings visualised

The settings regarding the key window (`KEY_win_H_start`, `KEY_win_H_stop`, `KEY_win_V_start` and `KEY_win_V_stop`) can be visualized as follows:

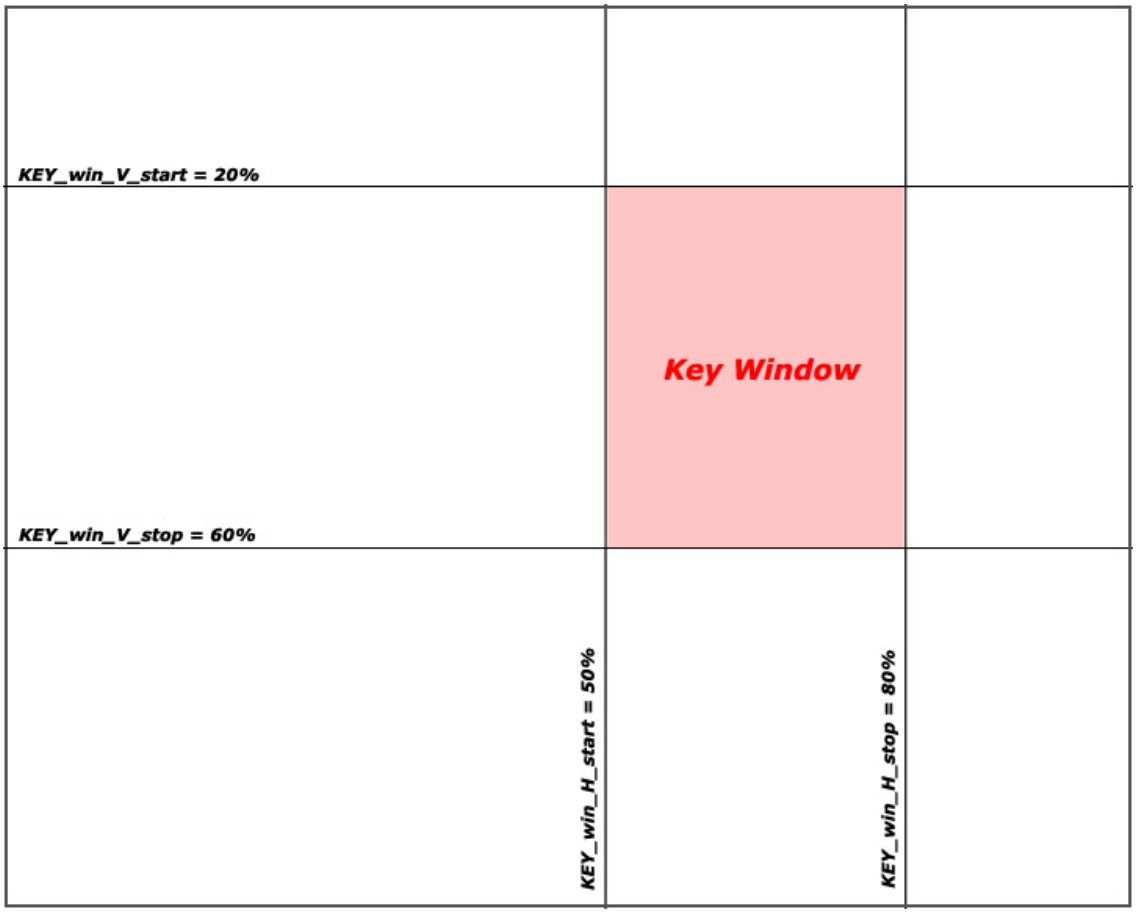

Only the area marked red will be keyed.

Appendix 2 Quad speed ADD-ON bus

Scope

The internal audio ADD-ON bus needs an upgrade. We want more channels (32 per video stream seems possible in the near future). And we want the bus to be bidirectional, so 32 channels in and 32 channels out at the same time.

The new interface needs to be compatible with all existing hardware (frames) and in the implementation of the master card it needs to be backward compatible with the original ADD-ON bus.

The master card will have two modes:

- Normal ADD-ON mode

  or

- Quad Speed audio ADD-ON mode

These modes are selectable on the Master Card. If a mode is selected all ADD-ON cards to that Master need to be in the same mode.
You can mix Master-Cards in one frame using the two different modes, but all cards to the right of the master must be in the same mode as the master. A new Master breaks the chain and the Master Card ADD-ON mode can be selected again.

Features

The following features and rules will apply:

- Up to 32 channels output from the master card with looping to up to 3 ADD-ON cards
  - The ADD-ON card just picks the channels it wants to process
- Up to 32 channels input on the master card
  - If the master card can handle less then 32 channels, the lowest channel numbers will be used, as the ADD-ON card will always generate 32 channels (where some can be zero)
- Channel shuffling is done in the ADD-ON card
  - The Master Card has only one setting to enable the quad speed audio bus
- Every Quad-Speed ADD-ON card takes 32 channels from the 'right hand ADD-ON card' and adds (or overwrites) the local processed channels.
  - This can be done for any of the channels that are processed in the ADD-ON card
- Master Cards are switchable between normal and quad-speed bus
- Channel designations on the block schematics:
  - Channel 1-32 (or less) are injected into the dark green large arrow from Master Card to ADD-ON card and looped on to the next ADD-ON card via the dark green arrow
  - The ADD-ON card injects up to 32 channels into the brown large arrow
  - An ADD-ON card will also actively loop extra processed channels into the next ADD-ON card, and finaly into the Master Card
- The cross looping of the original design is now a straight loop
- The quad speed bus can also work in one direction
  - You can use a Quad Speed audio bus to de-embed audio from the master and present on the ADD-ON card as AES/EBU, Bitstream (like Dolby) or analog audio

- If applicable the ADD-ON card can also be used as in injection point of physical audio streams

Example

The big difference between the new and old bus structure is the fact that it caries 4 times as much audio channels.

It is also bi directional by design. So half of the original physical infrastructure moves audio from the master card to the ADD-ON cards, and the other half is used to put the audio back

The following graphic shows how a typical quad speed bus chain works

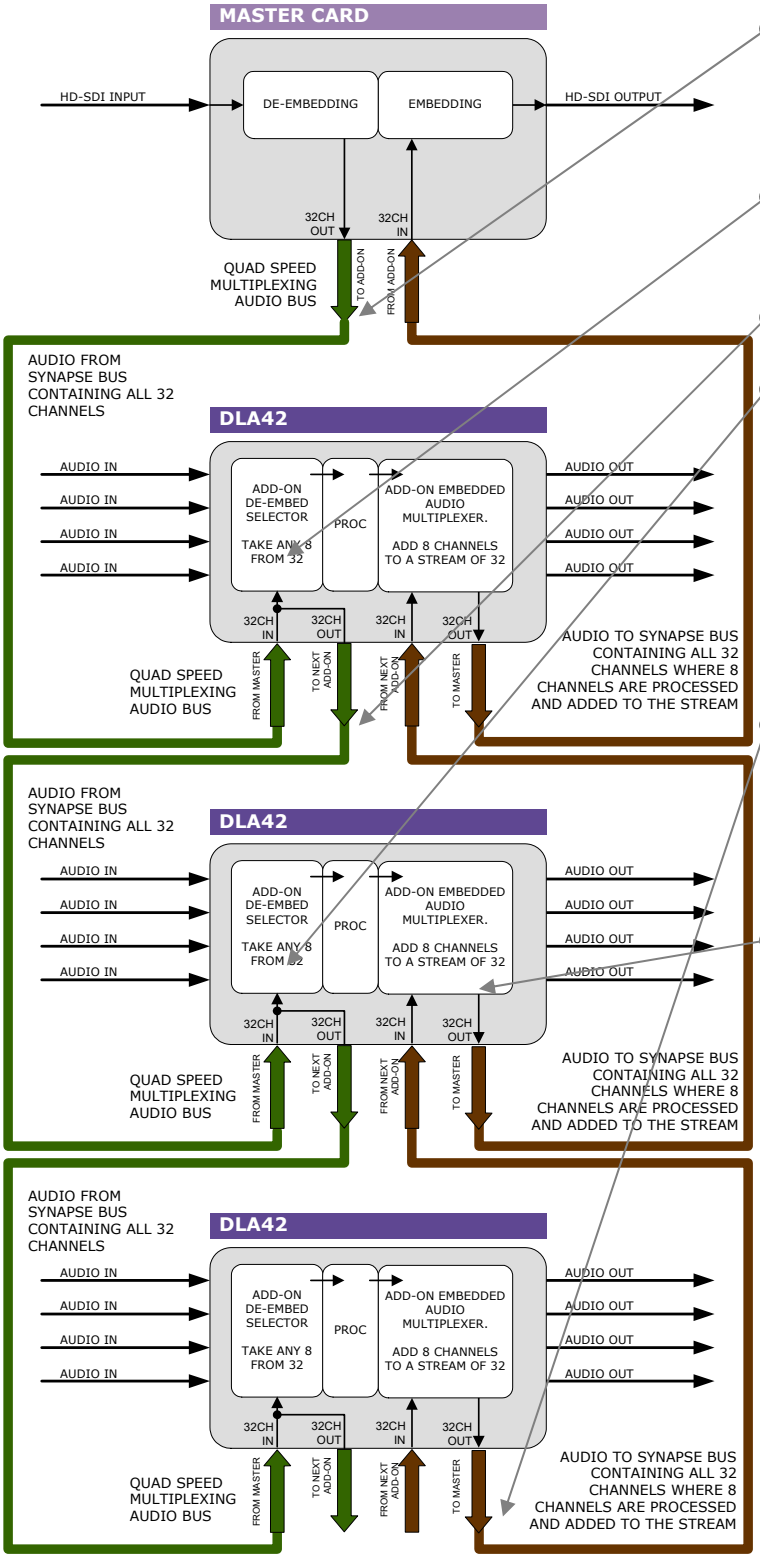

The audio coming from the master card (dark green arrow) contains up to 32 channels.

The first ADD-ON card can select any of the 32 channels for internal processing

These channels are looped on to the next ADD-ON card.

This next ADD-ON (sitting in the next n+1 slot) Card can also free select any 8 from 32 channels. *(The DLA42 can also take 3 channels from the ADD-ON bus and 5 channels from its physical input)*

This looping works up to 3 times.

The brown arrow is the return path and sends the (processed) audio back to the master card.
This path is 32 channels wide and is clocked from the master card.

The ADD-ON card can overwrite for instance 8 channels of the 32. These 32 channels are then transported to the next ADD-ON card which overwrites another 8 channels.

Multiplexing

The injection of processed audio into the master card works differently then you were used to with the original audio ADD-ON bus. The brown large arrow will always carry 32 channels from ADD-ON to ADD-ON, or from ADD-ON to Master Card. If the actual channels are used or which channels are used is determined in the ADD-ON card.

In the example below you can see a 4 Card system. One Master Card, and 3 Quad speed ADD-ON cards (the maximum). The last (most right) ADD-ON card processes 8 channels. They are inserted (a menu selection) in slot 17-24 from 32 channel-slots. The second ADD-ON card also processes 8 channels, but they are inserted in slot 9-16 (of 32 slots). The first ADD-ON card inserts channels 1 to 8

This method allows for overwriting slots that come from the right hand Master Card. Channel-slot 25 to 32 are left empty in this example.

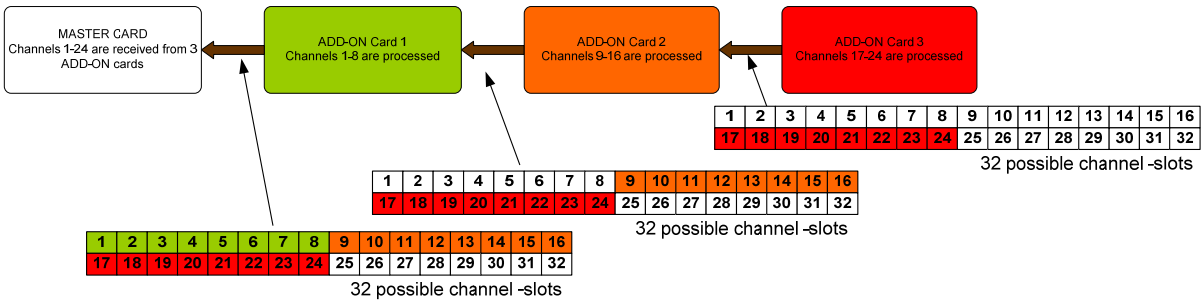

Note:
The top example shows a logical way of how the ADD-ON multiplexing could be performed. However; the insertion menu of for instance the DLA42 is much more flexible and allows putting every channel into any of the 32 channel-slots. The example below shows how the flexibility could be used.

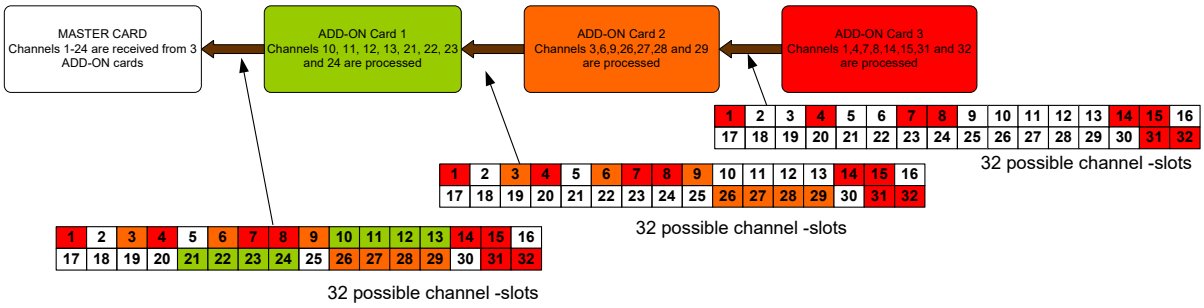

EVS Headquarters
Liège Science Park
13, rue Bois St Jean
B-4102 Seraing
Belgium

Corporate
+32 4 361 7000

North & Latin America
+1 973 575 7811

Asia & Pacific
+852 2914 2501

Other regional offices
www.evs.com/contact

To learn more about EVS go to **www.evs.com**