INSTALLATION & CONFIGURATION MANUAL

GEE200-230 / HEE200-230

3GB/S, HD, SD EMBEDDED DOMAIN DOLBY E/D/D+ DECODER AND DOLBY E ENCODER WITH AUDIO SHUFFLER AND OPTIONAL AUDIO DESCRIPTION PROCESSOR

Copyright

Disclaimer

The information in this manual is furnished for informational use only and subject to change without notice. While every effort has been made to ensure that the information contained in this user manual is accurate, up-to-date and reliable, EVS Broadcast Equipment cannot be held responsible for inaccuracies or errors that may appear in this publication.

Improvement Requests

Your comments will help us improve the quality of the user documentation. Do not hesitate to send improvement requests, or report any error or inaccuracy on this user manual by e-mail to doc@evs.com.

Regional Contacts

The address and phone number of the EVS headquarters are usually mentioned in the **Help > About** menu in the user interface.

You will find the full list of addresses and phone numbers of local offices either at the end of this user manual (for manuals on hardware products) or on the EVS website on the following page: http://www.evs.com/contacts.

User Manuals on EVS Website

The latest version of Media Infrastructure manuals are available at: https://mi-sftp.evs.com/
The user manuals for other EVS products can be found at the EVS download center, on the following webpage: https://www.evs.com/en/download-area.

WARNING: TO REDUCE THE RISK OF FIRE OR ELECTRICAL SHOCK, DO NOT EXPOSE THIS APPLIANCE TO RAIN OR MOISTURE

● ALWAYS disconnect your entire system from the AC mains before cleaning any component. The product frame (SFR18, SFR08 or SFR04) must be terminated with three-conductor AC mains power cord that includes an earth ground connection. To prevent shock hazard, all three connections must always be used.
● NEVER use flammable or combustible chemicals for cleaning components.
● NEVER operate this product if any cover is removed.
● NEVER wet the inside of this product with any liquid.
● NEVER pour or spill liquids directly onto this unit.
● NEVER block airflow through ventilation slots.
● NEVER bypass any fuse.
● NEVER replace any fuse with a value or type other than those specified.
● NEVER attempt to repair this product. If a problem occurs, contact your local EVS distributor.
● NEVER expose this product to extremely high or low temperatures.
● NEVER operate this product in an explosive atmosphere.

Warranty: EVS warrants their products according to the warranty policy as described in the general terms. That means that EVS Broadcast Equipment SA can only warrant the products as long as the serial numbers are not removed.

Date created: 08-06-2016
Date last revised: 21-09-2016

This product complies with the requirements of the product family standards for audio, video, audio-visual entertainment lighting control apparatus for professional use as mentioned below.

CE	EN60950	Safety
	EN55103-1: 1996	Emission
	EN55103-2: 1996	Immunity

EVS Broadcast Equipment GEE200-230 HEE200-230 FC Tested To Comply With FCC Standards FOR HOME OR OFFICE USE	This device complies with part 15 of the FCC Rules Operation is subject to the following two conditions: (1) This device may cause harmful interference, and (2) This device must accept any interference received, including interference that may cause undesired operation.

Table of Contents

1 Introduction to Synapse

An Introduction to Synapse

Synapse is a modular system designed for the broadcast industry. High density, intuitive operation and high quality processing are key features of this system. Synapse offers a full range of converters and processing modules. Please visit the EVS Broadcast Equipment SA Website at http://www.evs.com to obtain the latest information on our new products and updates.

Local Control Panel

The local control panel gives access to all adjustable parameters and provides status information for any of the cards in the Synapse frame, including the Synapse rack controller. The local control panel is also used to back-up and restore card settings. Please refer to the rack controller manuals for a detailed description of the local control panel, the way to set-up remote control over IP and for frame related settings and status information.

Remote Control Capabilities

The remote control options are explained in the rack controller manual. The method of connection to a computer using Ethernet is described in the ERC/ERS/RRC/RRS manual.

! “EVS CORTEX” SOFTWARE WILL INCREASE SYSTEM FLEXIBILITY OF ONE OR MORE SYNAPSE FRAMES

Although not required to use Cortex with a Synapse frame, you are strongly advised to use a remote personal computer or laptop PC with EVS Cortex installed, as this increases the ease of use and understanding of the modules.

2 Unpacking and Placement

Unpacking

The EVS Synapse card must be unpacked in an anti-static environment. Care must be taken NOT to touch components on the card – always handle the card carefully by the edges. The card must be stored and shipped in anti-static packaging. Ensuring that these precautions are followed will prevent premature failure from components mounted on the board.

Placing the card

The Synapse card can be placed vertically in an SFR18 frame or horizontally in an SFR04 and SFR08 frame. Locate the two guide slots to be used, slide in the mounted circuit board, and push it firmly to locate the connectors.

Correct insertion of card is essential as a card that is not located properly may show valid indicators, but does not function correctly.

NOTE: On power up all LED's will light for a few seconds, this is the time it takes to initialise the card.

3 A Quick Start

When Powering-up

On powering up the Synapse frame, the card set will use basic data and default initialisation settings. All LED's will light during this process. After initialisation, several LED's will remain lit – the exact number and configuration is dependent upon the number of inputs connected and the status of the inputs.

Changing settings and parameters

The front panel controls or the EVS Cortex can be used to change settings. An overview of the settings can be found in chapter 5, 6 and 7 of this manual.

Front Panel Control

Front Panel Display and Cursor

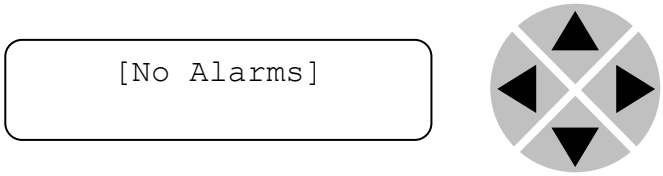

Settings are displayed and changed as follows;

Use the cursor 'arrows' on the front panel to select the menu and parameter to be displayed and/or changed.

Press ►	To go forward through the menu structure.
Press ◄	To go back through the menu structure.
Press ▲	To move up within a menu or increase the value of a parameter.
Press ▼	To move down through a menu or decrease the value of a parameter.

NOTE: Whilst editing a setting, pressing ► twice will reset the value to its default.

Example of changing parameters using front panel control

With the display as shown below

```
RRC18 [Select Card]
>S01=SFS10
```

Pressing the ► selects the SFS10 in frame slot 01.

The display changes to indicate that the SFS10 has been selected. In this example the `Settings` menu item is indicated.

```
SFS10 [Select Menu]
>Settings
```

Pressing the ► selects the menu item shown, in this example `Settings`.

(Pressing ▲ or ▼ will change to a different menu eg `Status, Events)`.

The display changes to indicate that the SFS10 `Settings` menu item `SDI-Format` has been selected and shows that it current setting is `Auto`.

```
SFS10 [Settings]
>SDI-Format=Auto
```

Pressing the ► selects the settings item shown, in this example `SDI-Format.`

(Pressing ▲ or ▼ will change to a different setting, eg `Mode, H-Delay)`.
The display changes to indicate that the SFS10 `Edit Setting` menu item `SDI-Format` has been selected.

```
SFS10 Edit Setting]
SDI-Format>Auto
```

To edit the setting of the menu item press ▲ or ▼.

All menu items can be monitored and/or changed in this way. Changing a setting has an immediate effect.

EVS Cortex Software

EVS Cortex can be used to change the settings of Synapse modules from a PC, either locally or remotely. The software enables communication based on TCP/IP between the Setup PC and Synapse frames/modules.

Each Synapse frame is addressed through its rack controller's unique IP address, giving access to each module, its menus and adjustment items. EVS Cortex has access to data contained within the Synapse module and displays it on a GUI. The software has an intuitive structure following that of the module that it is controlling.

For operation of EVS Cortex, please refer to the Cortex help files.

Menu Structure Example

Slot	Module		Item		Parameter		Setting
▲							
▲							
S0□			Identity				
▲			▲				
S01	SFS10	►	Set-tings	►	Standard_dig	►	Auto
▼			▼		▼		▼
S00	RRC18		Status		Mode		625
			▼		▼		▼
			Events		Ref-Input		525
					▼		
					H-Delay		
					▼		
					▼		

NOTE: Further information about Front Panel Control and EVS Cortex can be obtained from the ERC, ERS, RRC and RRS operational manuals and the Cortex help files.

4 The G/HEE200-230 card

Introduction

The GEE200/230 and HEE200/230 are embedded domain Dolby E/D/D+ to Dolby E processors with optional fully routable Audio Description processor.

Based on the Dolby's Cat. No. 1100 sub module it is capable of ***decoding*** **Dolby E, Dolby Digital** and **Dolby Digital Plus** and ***encoding*** to **Dolby E**. The enhanced feature set includes the capability of decoding 7.1-channel Dolby Digital Plus or 5.1-ch with audio description, carried in a single bitstream (Single PID), or as two bitstreams (Dual PID).

This processor uses a stereo track as main program (input 1-2 of the AD processor) and mixes the AD track triggered by the mix enable track (input 3-4 of the AD processor). The output of the AD processor can be routed to any of the Dolby E encoder inputs or any of the normal PCM channels of the 16 channel embedder. Simultaneous encoding of 5.1, 5.1+2.0 or 4 individual stereo channels (languages) to a Dolby E stream is possible.

The Quad Speed audio bus allows for implementation of 'in between' audio processing. This means that we can stream the decoded Dolby audio to a Quad Speed Audio ADD-ON card like the DLA44 or DLA42, process this audio and send it back to the G/HEE2x0 for encoding into Dolby E. The ADD-ON card does not need a connector panel and all audio routing is performed inside the Synapse frame by just placing these cards in adjacent slots.

The HEE2x0 can be future upgraded to GEE2x0. This allows for staged implementation of HD infrastructures and spread the cost over multiple budget years.

Features

- Dolby E, Dolby Digital and Dolby Digital Plus decoding
- Encoding of up to 4 times 2.0 Dolby E outputs, or 5.1 Dolby E or 5.1+2.0 Dolby E
- Audio Description processor with free routable I/O
- S2020 metadata handling
- 2 SDI inputs (with auto switch on carrier loss, and switch back function)
- Compatible with the following input formats (auto selecting): 1080p59.94/50 (GED only), 1080i59.94/50, 1080p29.97/25, 1080p(sf)23.98, 7020p59.94/50 and SD625/525.
- Offset video delay adjustable between 0 and 1000ms
- Quad Speed Audio ADD-ON bus for bidirectional audio processing
- 2 SDI + embedded audio outputs
- 7 presets that configure all 16 input channels at once. controlled by GPI or ACP (Cortex)
- Append and overwrite modes
- Audio level and phase control
- Audio offset delay up to 5000 ms
- Peak detection 0dBFS
- Silence detection with threshold (-100 to -20dBFS) and time control (1 to 255 sec)
- Transparent for ATC time code RP188, RP196, RP215
- Locks to Tri-level, Bi-level syncs or input
- Full control and status monitoring through the front panel of the SFR04/SFR08/SFR18 frame and the Ethernet port (ACP)
- Optional 1 or 2 fiber inputs, 1 or 2 fiber outputs or a fiber in and output (replacing 1 SDI in and output) on the I/O panel
- Optional relay bypass (BHX18D)

Applications

- 3Gb/s, HD and SD Dolby transcoding in transmission
- Preset based 16 channel audio/bitstream shuffling

Block schematic

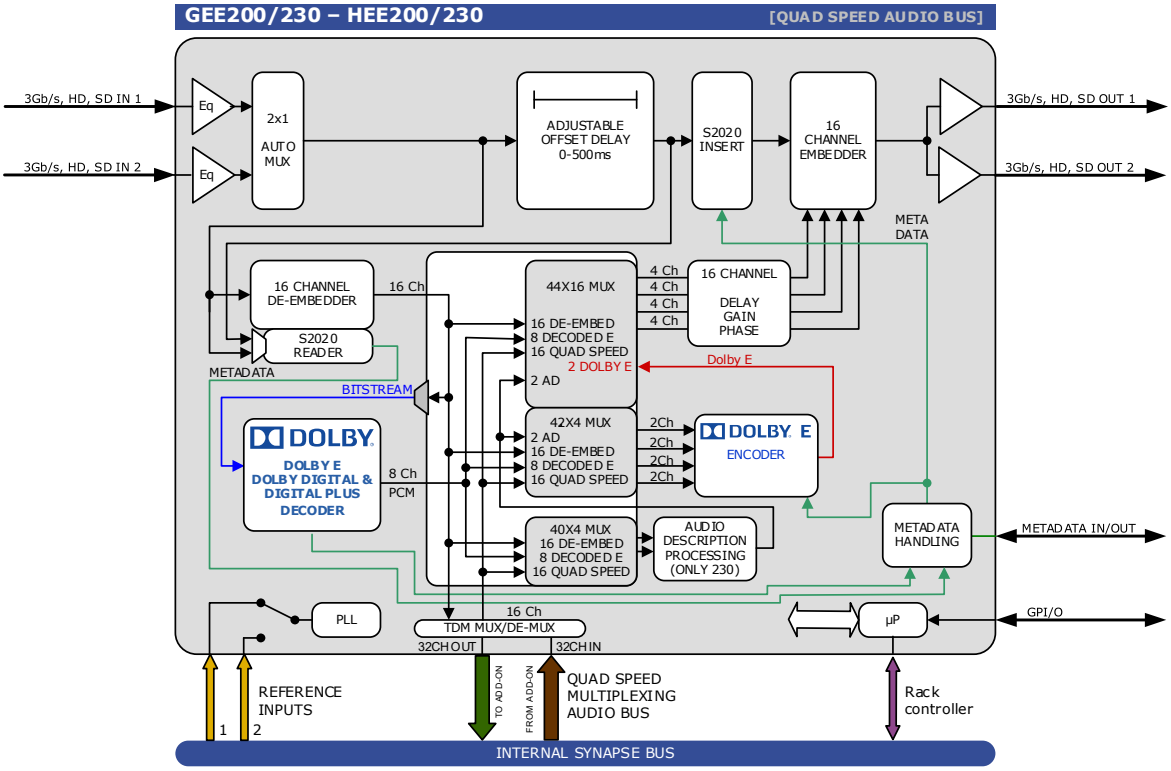

Quad speed bus layout

The GEE/HEE2x0 puts all audio on the quad speed audio bus by default in the following way:

Addon bus channel	Source
1 till 16	SDI de-embedder outputs 1 till 16
17 till 24	Dolby E Decoder outputs (PCM) 1 till 8
25 till 26	Encoder outputs 1 till 2

5 Settings Menu

Introduction

The settings menu displays the current state of each GEE-HEE2x0 setting and allows you to change or adjust it. Settings can be changed using the front panel of the Synapse frame (SFR18, SFR08 or SFR04) or with Cortex. Also the SCP08 control can be used. Please refer to chapter 3 for information on the Synapse front panel control and Cortex.

Note: All items preceded with a #-sign are part of the presets.

VIDEO

Input-Select

With this item you can decide which of the 2 inputs is used and how the card will switch between the 2 inputs. Choices are:

- `SDI-1`: only input 1 is used (disables detection of input 2)
- `SDI-2`: only input 2 is used (disables detection of input 1)
- `Auto`: The card chooses input 1 if there is a source. If there is no input 1, the card will automatically switch to input 2 input (with SDI 1 as priority)

Switch-Back

With `Inp_Select` set to `Auto`, the card will automatically switch to the other input when the first input was lost. With `Switch-Back` set to `On`, the card will switch back to the first input if this it is back up again. When set to `off`, it will remain on SDI2 until it is changed manually or when SDI2 fails.

Lock-Mode

`Lock-Mode` determines whether the card is locked to input 1 (`SDI1`), input 2 (`SDI2`) or to the reference (`Ref1` or `Ref2`). Can also be set to `Auto-SDI`, automatically selecting the currently active SDI input to lock to. By default it is set to `SDI1`.

Out-Frmt

With `Out-Frmt` you can set what the output should be. This setting is only used for the delay options. This will not up/down/cross convert your input signal. Possible settings are:

- `1080i60`, `1080i50`
- `1080p30`, `1080p25`, `1080p24`
- `720p60`, `720p50`
- `SD525`, `SD625`
- `1080p50`, `1080p60` (GEE only)
- `Auto` (default, automatically sets the input format as `Out-Frmt`)

Input_Loss

Here you can set what the output of the card should be when the input is lost. When set to `No-SDI-Out` the output-carrier will be dropped so the equipment after the GEE/HEE2x0 will detect a true signal loss. Default it is set to `Off`.

Phaser1-Offset

The timing or offset of the autophaser of SDI Input 1 can be tuned with `Phaser1-Offset` (see block schematic) between 0 and 4124px. Default is 0px.

A correct function of the autophaser can be checked using status-items `Phaser1_H_Pos` and `Phaser1_Stat`. When `Phaser1_Stat` shows `Safe`, the autophaser is working in its `Safe`-region. When `Phaser1_Stat` shows `Warning` or `Critical`, the setting `Phaser1_Offset` can be used to tune the autophaser into its `Safe` -region.

The autophaser is enabled when the setting `Lock-Mode` is set to `Ref1` or `Ref2` and when a Ref is present, shown by the status-item `Ref-Format`.

Phaser2-Offset

The timing or offset of the autophaser of SDI Input 2 can be tuned with `Phaser2-Offset` (see block schematic) between 0 and 4124px. Default is 0px.

A correct function of the autophaser can be checked using status-items `Phaser2_H_Pos` and `Phaser2_Stat`. When `Phaser2_Stat` shows `Safe`, the autophaser is working in its `Safe`-region. When `Phaser2_Stat` shows `Warning` or `Critical`, the setting `Phaser2_Offset` can be used to tune the autophaser into its `Safe` -region.

The autophaser is enabled when the setting `Lock-Mode` is set to `Ref1` or `Ref2` and when a Ref is present, shown by the status-item `Ref-Format`.

Phaser-status

It is possible to display the function of the autophasers in the status menu of the card. This setting enables or disables the status-items: `Phaser1_H_Pos`, `Phaser2_H_Pos`, `Phaser1_Stat` and `Phaser2_Stat`. Default setting is `Off`.

DELAY

Delay-Bypass

You can bypass the delay block entirely by setting this to `on`. By default it is switched `off`.

Delay-mode_1

With this setting you decide whether the card should apply delay to the video outputs by means of time in milliseconds (defined with `Time-Delay_1`) or to apply delay by means of frames, lines and pixels (`Fr-Ln-Px`). Default is `Fr-Ln-Px`.

Time-Delay_1

This setting is only used when `Delay-mode_1` is set to `Time`. It defines the delay that should be applied to the video in milliseconds between 0 and 1000ms.

F-delay_1

`F-Delay_1` sets the amount of delayed Frames. The available range is from 0 to 60 frames (dependent on the input format). The default setting is 1 frame. The maximum offset video delay for the GEE/HEE2x0 is 1000ms.

V-delay_1

`V-Delay_1` setting allows adjustment of the vertical phase of the output signal with respect to the selected reference input.

The `V-Delay_1` setting gives a delay in addition to the reference timing. For example: if the `V-Delay_1` is set to 10 TV HD lines, the output signal will be delayed by reference timing + 10 TV HD lines. The signal is delayed (advanced) with respect to the phase of the reference signal. The available range is from 0 to a maximum of 1124 lines (dependent on input format). The default setting is `0ln`.

H-delay_1

The `H-Delay_1` setting allows adjustment of the Horizontal phase of the output signal with respect to the selected reference input.

The `H-Delay_1` setting gives a delay in addition to the reference timing. For example: if the `H-Delay_1` is set to 10 pixels, the output signal will be delayed by reference timing + 10 pixels. The signal is delayed (advanced) with respect to the phase of the reference signal. The available range is from 0 to a maximum of 4124 pixels (dependant on input format). The default setting is `0px`.

Delay-Status

It is possible to display (in the status menu `IODelay1`) the processing time of the card in the status menu. This setting allows you to switch this function `ON` or `OFF`. Default setting is `OFF`

PRESET

Control

With this setting you decide whether you want to manually change the presets, change preset via the GPI contacts or change it by signal loss detection (see setting `LossDetect`). A combination of GPI contact overrides together with loss detection is also possible. `GPI+LossDetect` only works in non-latch mode. Default is `manual`.

GPI-Ctrl

The GEE/HEE2x0 has several physical GPI contacts to control the card's presets (if presets are set to be GPI controlled)

`Latch`: Latching GPI mode. When a contact is closed momentarily (edge triggered).

`Non-Latch`: Non-latching GPI mode. When a contact is closed all the time (level triggered).

`BCD`: Binary GPI mode. GPI contacts work viewed in the following table:

GPI 3	GPI 2	GPI 1	Activate preset
0	0	0	No change
0	0	1	Preset 1
0	1	0	Preset 2
0	1	1	Preset 3
1	0	0	Preset 4
1	0	1	Preset 5
1	1	0	Preset 6
1	1	1	Preset 7

ExtMode

With this item you set the purpose of pins 5 till 8 of the RJ45 connector on the backpanel. The pupose can be either additional `GPIO` contacts (resulting in 7 GPI contacts instead of 3) or to use those pins as a dolby `metadata` I/O. Default is `GPIO`.

LossDetect

With this setting you can set which source should be checked for the `LossDetect` function (see settings `Control` and `MD-control`). When the here-set-source is lost, the card will switch to the preset set with the `Loss` setting. When the source returns, the card will switch to the preset set with the `Detect` setting.

Sources which can be checked on are `DolbyE`, `S2020-SDI`,`MD-LocalIn` (local metadata input) or `DolbyDigital(+)`. Default is `DolbyE`.

Note: Abovementioned Dolby sources are *detected* sources and are not

necessarily supported by embedded Dolby encoders or decoders.

Note: If `LossDetect` is being used settings `#Emb-Mode`, `#Emb_A_Sel` ~ `#Emb_D_Sel` need to have the same values for both "loss" and "detect" presets to circumvent 'reset' of the embedders. This can result in Dolby and/or PCM CRC errors at the output of the embedders.

Loss

Here you select to which of the 7 preset the card should switch in case the source set with `LossDetect` is lost. When set to `off` the card will not switch presets when a loss is detected. Default is `off`.

Detect

Here you set a preset to which the card should switch in case a lost source (set with `LossDetect`) has returned. Besides the 7 presets, you can set it to `S2020-SDID`, `ProgramConfig`, `Previous` (previous active preset before the signal was lost) or `off` (don't switch presets when signal returns, default).

`S2020-SDID` switches the card to a predefined preset according to the value of the SDID:

- 00 (none) → Preset 8
- 01 (Ch01/02) → Preset 8
- 02 (Ch03/04) → Preset 9
- 03 (Ch05/06) → Preset 10
- 04 (Ch07/08) → Preset 11
- 05 (Ch09/10) → Preset 12
- 06 (Ch11/12) → Preset 13
- 07 (Ch13/14) → Preset 14
- 08 (Ch15/16) → Preset 14

`ProgramConfig` switches the card to a predefined preset according to the value of the metadata program configuration:

- 7.1 → Preset 8
- 5.1+2 → Preset 9
- 5.1 → Preset 10
- 4x2 → Preset 11
- 3x2 → Preset 12
- 2+2 → Preset 13
- Other → Preset 14

LossDetect_2

With this setting you can set which source should be checked for the `LossDetect_2` function. This second loss-detect function comes into effect when *`LossDetect`* functionality is enabled in the `Config` setting, a loss is detected according to the first loss-detect function (`LossDetect` setting) and the `LossDetect_2` function is enabled (i.e. not set to `off`).

When the here-set-source is lost, the card will switch to the preset set with the `Loss_2` setting. When the source returns, the card will switch

to the preset set with the `Detect_2` setting.

Sources which can be checked on are `DolbyE`, `S2020-SDI`,`MD-LocalIn` (local metadata input) or DolbyDigital(+). Default is `DolbyE`.

Note: Abovementioned Dolby sources are *detected* sources and are not necessarily supported by embedded Dolby encoders or decoders.

Note: If `LossDetect` is being used settings `#Emb-Mode`, `#Emb_A_Sel` ~ `#Emb_D_Sel` need to have the same values for both "loss" and "detect" presets to circumvent 'reset' of the embedders.

This can result in Dolby and/or PCM CRC errors at the output of the embedders.

Loss_2

Here you select to which preset the card should switch when the `LossDetect_2` function is in effect and the source set in the `LossDetect_2` setting is lost. Can be presets 1 to 7 (`Preset 1` ~ `Preset 7`) or `off` When set to `off` the card will not switch presets when a loss is detected. Default is `off`.

Detect_2

With this setting you select to which preset the card should switch when the `LossDetect_2` function is in effect and the source set in the `LossDetect_2` setting is detected. Besides the preset 1 to 7 (`Preset 1` ~ `Preset 7`), you can set it to `S2020-SDID`, `ProgramConfig`, `Previous` (previous active preset before the signal was lost) or `off` (don't switch presets when signal returns, default).

`S2020-SDID` and `ProgramConfig` switches the card to a predefined preset according to the value of the SDID and the value of the metadata program configuration, equal to what is explained at the `Detect` setting.

Active-Preset

With this item you can manually change the currently active preset. Can be any preset between 1 and 7. By default it is set to 1. All menu settings that are preceded with a '`#`'-prefix are part of the preset.

Edit-Preset

Here you can select which of the 7 selectable presets you want to edit. Changing this will not change the active preset, unless the currently active preset is the same you are going to edit. All menu settings that are preceded with a '`#`'-prefix are part of the preset.

#Preset_Name

Sets/displays the name of the currently displayed preset.

PrstEditView	With this setting set to `Follow Active`, the edit preset settings will follow the active preset when the active preset is changed. This to avoid confusion when changing the active. Set to `Independent` the edit preset will not automatically follow active preset changes. By default set to `Follow Active`.
	DOLBY DECODER
SourceDecoder	With this setting you can decide the source of the Dolby E decoder: SDI input, add-on bus channels 1/16 or add-on bus channels 17/32. Default is `SDI`.
DecoderIn	Here you select a specific audio pair, out of the above selected input, which contains the Dolby bitstream. `Ch01/02` till `Ch15/16` can be chosen. `Ch01/02` is default.
Downmix_Type	Here you can set the downmix mode of the downmix output of the Dolby Decoder. Can be Lt/Rt (Left total/right total, a downmix suitable for decoding with a Dolby Pro Logic upmixer to obtain 5.1 channels again), Lr/Ro (Left only/right only, a downmix suitable when mono compatibility is required), or Auto (Lt/Rt or Lo/Ro is chosen dependant on the whether or not there's a 5.1 program config. Default is Auto
DolbyE_Prog_Sel	Selects which Dolby E Program is output from the monitor output.
Main_DRC_DD	With this setting you decide whether you want to apply the dynamic range (`None (Dialnorm)`, `RF mode` or `Line mode`) to the output signal of the decoder when the input is Dolby Digital.
Main_DRC_E	With this setting you decide whether you want to apply the dynamic range (`None (Dialnorm)`, `RF mode` or `Line mode`) to the output signal of the decoder when the input is Dolby E.
Main_DRC_PCM	With this setting you decide whether you want to apply the dynamic range (`None (Dialnorm)`, `RF mode` or `Line mode`) to the output signal of the decoder when the input is PCM.

Aux_DRC_DD

With this setting you decide whether you want to apply the dynamic range (`RF mode` or `Line mode`) to the monitoring signal of the decoder when the input is Dolby Digital.

Aux_DRC_E

With this setting you decide whether you want to apply the dynamic range (`RF mode` or `Line mode`) to the monitoring signal of the decoder when the input is Dolby E.

Aux_DRC_PCM

With this setting you decide whether you want to apply the dynamic range (`None (Dialnorm)`, `RF mode` or `Line mode`) to the monitoring signal of the decoder when the input is PCM.

ELossBckupSrc

In case there is a loss of Dolby (E/D/D+) detected, a backup PCM source can be set on the Dolby decoder output(s). The following schematic displays how this backup functions:

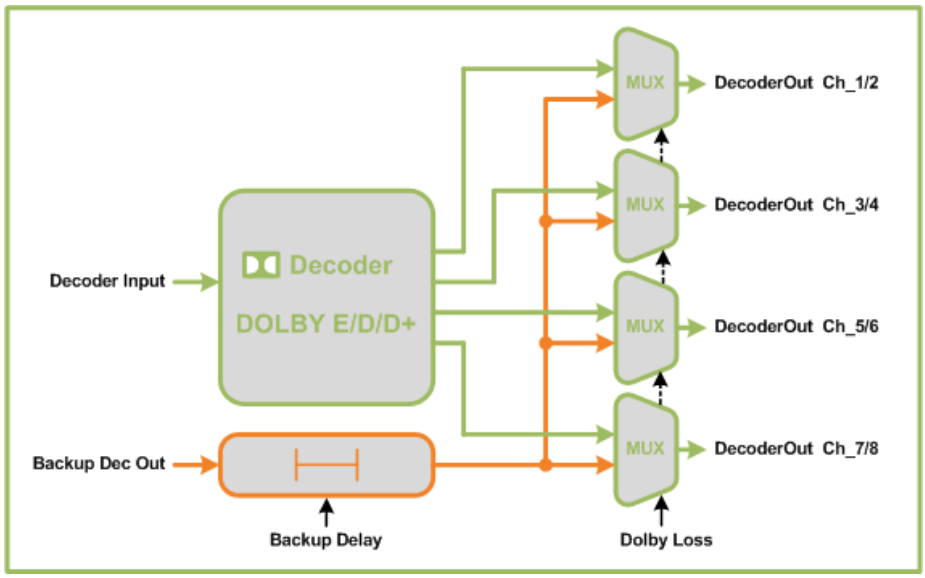

With this `ELossBckupSrc` setting you can set the source of the backup PCM: SDI input, add-on bus channels 1/16 or add-on bus channels 17/32. Default is `SDI`.

ELossBckupCh

Here you select a specific audio pair, out of the above selected backup source, which contains the backup PCM audio pair you would like to set as decoder output when Dolby (E/D/D+) is lost. `Ch01/02` till `Ch15/16` can be chosen. `Ch01/02` is default.

ELossBckupDelay

Here you set the delay in milliseconds with which you want to delay the backup PCM channels. Can be set between 0 and 5000ms. Default is 40ms.

	DOLBY D+ DECODER
Ad_mix	If the decoder receives an input stream with AD program content, mixing occurs according to the input stream mixing metadata. The user has the option of routing the `mixed` audio, main audio (`Main_only`), or associated audio to the main output (`AD_only`).
Ad_2ch_mix	Same as `Ad_mix`, but for the 2ch monitoring output of the decoder. Here you can set the audio description as your monitoring output
Operating_mode	The content of the dual-substream inputs (including 7.1 and 5.1+AD) has to be set manually with this setting.
	DOLBY ENCODER
#SourceEncoder01 ~ #SourceEncoder08	The Dolby Digital encoder of the GEE/HEE2x0 has 8 inputs, because a Dolby bitstream can contain up to 8 channels (for instance in a 5.1+2 situation). With these setting you can decide the source of the each individual input: `SDI` input, add-on bus channels 1/16, add-on bus channels 17/32, the output of the decoder (`DecoderOut`) or the output of the audio description processor (`AudioDescrOut`). Default is `DecoderOut`.
#EncoderIn01 ~ #EncoderIn08	Here you select a specific channel, out of the above selected input, which contains the corresponding part of the Dolby bitstream. `Ch_1` till `Ch_16` can be chosen. `Ch_1` till `Ch_8` are default.
#Enc_config	With this setting you configure the encoder. The GEE/HEE2x0 supports multiple output formats. This always sets the maximum amount of channels (so metadata could change 5.1 to 2.0). Default setting is `5.1+2.`
#Enc_MD_Src	Here you select where the metadata for the Dolby Encoder should come from. Can be coming from the SDI input (`SDI`, default), from the Dolby E input (`DecoderOut`), from the I/O-panel RJ45 metadata input (`Local`), or from the card's internal metadata generator (`ShufflerOut`).

#Enc_MD_Delay

The metadata source of the Dolby Encoder, selected with (#Enc_MD_Src) can be delayed from 0 to 15 video frames. Default is 0 frames.

GB_Shift

With this setting you can apply a guard band shift of up to 625 lines. This allows you to make small adjustments to the length of the guard band. The guard band of Dolby E is visualized in the following illustration.

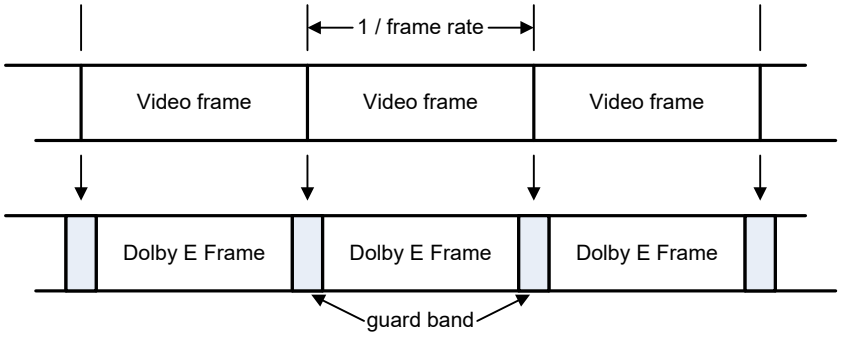

DolbyE Depth

If needed the E encoder can be forced to encode in 16 bits or in 20 bits. Default is 20 bits.

If 16 bit depth is selected, and a program config of more than 6 channels is also selected (via internal or external metadata), then an 'appropriate' 6 channel program config will be automatically used instead. For example: bit depth = 16 bit, program config set to 5.1+2, then the Dolby E encoder will use Program Config 5.1 for encode. Therefore the +2 channels for the encoder will be dropped.

VsyncALIGN

If the Vsync signal is present and properly matched, the DOLBY DECODER/ENCODER can then attempt to perfect the alignment. This option (vsyncALIGN) enables latency adjustment of the decoded audio so that the Dolby E stream is aligned exactly to the Vsync signal. The latency adjustment amount is up to plus or minus half the guard band length listed in the following table.

Guard Band Length	Frame Rate
360 samples	23.98 Hz
360 samples	24 Hz
192 samples	25 Hz
160 samples	29.97 Hz
160 samples	30 Hz

VsynENA

If the option (`vsyncALIGN`) to align a Vsync signal when decoding Dolby E is set, and the signal is not aligned (within the tolerance window), the DOLBY DECODER/ENCODER can then attempt to reconstruct the alignment. This option (`VsyncENA`) adjusts the latency of the decoded audio so that the Vsync signal is aligned exactly to the

Dolby E stream. The amount of latency added for the alignment is limited by the corresponding video frame length.

AUDIO DESCRIPTION (GEE-HEE230 models only)

The audio description block has 4 input and 4 outputs (only the 2 processed AD output channels are connected). The inputs are:

- `ADProg1`: The first actual program audio channel which will be mixed with the audio description.
- `ADProg2`: The second actual program audio channel which will be mixed with the audio description.
- `AD`: the audio description or voice-over audio channel
- `ADControl`: a non-audio signal, which contains Gain and Pan information about how the mix the audio description signal with audio description programs.

The following schematic displays how the audio description block works:

AD-Loss
(GEE-HEE230 only)

By default, program material processed with audio description is on audio description output Ch1 and Ch2 (see above schematic).

If `AD-Loss` setting is set to `off` and the `ADControl`input (see above schematic) loses its AD control signal, the `AD` and `ADControl` inputs are transparently routed to audio description outputs Ch1 and Ch2 (no processing or shuffling).

If `AD-Loss` is set to `1/2->3/4` and the `ADControl` input (see above schematic) loses its AD control signal, the program material present on the ADProg1 and ADProg2 inputs will be transparently copied to audio description outputs Ch1 and Ch2. This is the default setting.

If `AD-Loss` is set to `3/4->1/2` it works the same as `1/2->3/4` only in the opposite direction (Ch3 and Ch4 will be copied to Ch1 and Ch2, which are not connected in the GEE/HEE2x0).

If `AD-Loss` is set to `Mute-1/2` and the `ADControl` input (see above schematic) loses its AD control signal, output channels 1 and 2 will be muted (not connected in the GEE/HEE2x0).

If `AD-Loss` is set to `Mute-3/4` and the `ADControl` input (see above schematic) loses its AD control signal, the audio description outputs Ch1 and Ch2 will be muted.

SourceADProg1
(GEE-HEE230 only)

Here you set the source of the `ADProg1` input (see above schematic). Can be `SDI` (de-embedder output), `DecoderOut` (Dolby decoder output), `Addon01/16` (quadspeed add-on bus inputs 1 till 16) or `Addon17/32` (quadspeed add-on bus inputs 17 till 32). Default is `SDI`.

ADProg1
(GEE-HEE230 only)

Here you select one out of the 16 channels of the above selected source which will be your `ADProg1` input. Can be set to `off`, in which case there will be no audio on `ADProg1`. Default is `Ch_1`.

SourceADProg2
(GEE-HEE230 only)

Here you set the source of the `ADProg2` input (see above schematic). Can be `SDI` (de-embedder output), `DecoderOut` (Dolby decoder output), `Addon01/16` (quadspeed add-on bus inputs 1 till 16) or `Addon17/32` (quadspeed add-on bus inputs 17 till 32). Default is `SDI`.

ADProg2
(GEE-HEE230 only)

Here you select one out of the 16 channels of the above selected source which will be your `ADProg1` input. Can be set to `off`, in which case there will be no audio on `ADProg1`. Default is `Ch_2`.

SourceAD
(GEE-HEE230 only)

Here you set the source of the `AD` input (see audio description block schematic). Can be `SDI` (de-embedder output), `DecoderOut` (Dolby decoder output), `Addon01/16` (quadspeed add-on bus inputs 1 till 16) or `Addon17/32` (quadspeed add-on bus inputs 17 till 32). Default is `SDI`.

AD
(GEE-HEE230 only)

Here you select one out of the 16 channels of the above selected source which will be your `AD` input. Can be set to `off`, in which case there will be no audio on `ADProg1`. Default is `Off`.

SourceADControl
(GEE-HEE230 only)

Here you set the source of the `ADControl` input (see audio description block schematic). Can be `SDI` (de-embedder output), `DecoderOut` (Dolby decoder output), `Addon01/16` (quadspeed add-on bus inputs 1 till 16) or `Addon17/32` (quadspeed add-on bus inputs 17 till 32). Default is `SDI`.

ADControl (GEE-HEE230 only)	Here you select one out of the 16 channels of the above selected source which will be your `ADControl` input. Can be set to `off`, in which case there will be no audio on `ADProg1`. Default is `Off`.
ADProg1_Gain (GEE-HEE230 only)	Adjusts the gain for the ADProg1 input between -60 and 12dB. -999dB means the audio will be muted. Default is 0dB.
ADProg2_Gain (GEE-HEE230 only)	Adjusts the gain for the ADProg2 input between -60 and 12dB. -999dB means the audio will be muted. Default is 0dB.
AD_Gain (GEE-HEE230 only)	Adjusts the gain for the AD input between -60 and 12dB. -999dB means the audio will be muted. Default is 0dB.
ADProg1_Delay (GEE-HEE230 only)	With this setting you can separately delay the ADProg1 input between 0ms and 5000ms. Default is 0ms.
ADProg2_Delay (GEE-HEE230 only)	With this setting you can separately delay the ADProg2 input between 0ms and 5000ms. Default is 0ms.
AD_Delay (GEE-HEE230 only)	With this setting you can separately delay the AD input between 0ms and 5000ms. Default is 0ms.
ADControl_Delay (GEE-HEE230 only)	With this setting you can separately delay the ADControl input between 0ms and 5000ms. Default is 0ms.
	EMBEDDING
#Emb- Mode	With `Emb-Mode` you select how the audio in should be embedded into the video: `overwrite` the existing audio, or `Append`. Can also be set to `off` (switching off embedding entirely). Default is `overwrite`.
#Emb_GrpSel	With this setting you select which audio groups of embedder 1 should be enabled for embedding audio into video output 1 and 2. The groups `group1`, `group2`, `group3` or `group4` can be separately set to be ON or OFF in the selection list. You can also choose to not enable any of the audio groups by setting this item to "____". By default it is set to "`1234`", All groups active.

EMB AUDIO OUT

#Emb1_Ch01/04 ~ #Emb1_Ch013/16

With these settings you can select where the corresponding audio channels of embedder 1 are coming from. These settings are part of the main preset.

The object contains a string that holds 4 channels, 1 channel is 2 hexadecimal big. The string is from left to right up numbered. For the possible values ranges for the 2 hexadecimal see the next table:

Source	Channel	Hex value
SDI1	Ch 01 to Ch 16	0x00 to 0x0F
DecoderOut	Ch 01 to Ch 08	0x10 to 0x17
EncoderOut	Ch 01 to Ch 02	0x18 to 0x19
AddOn	Ch 01 to Ch 32	0x20 to 0x3F
AudioDescrout	Ch 01 to Ch 02	0x40 to 0x41
DecoderMonOut	Ch 01 to Ch 02	0x42 to 0x43

For example:
#Emb1_Ch01/04 = “09 11 2F 42“

- Embedder Ch01 = 0x09 = SDI1 Ch10
- Embedder Ch02 = 0x11 = DecoderOut Ch02
- Embedder Ch03 = 0x2F = AddOn Ch16
- Embedder Ch04 = 0x42 = DecoderMonOut Ch01

Emb1_Gain01 ~ Emb1_Gain16

Adjusts the gain for the corresponding incoming audio channel between -60 and 12dB. -999dB means the audio will be muted. Default is 0dB.

Emb1_Delay01 ~Emb1_Delay16

Adjusts the delay of the corresponding audio channel between 0 and 5000ms.

Emb1_Phase01/16

Adjusts the audio phase of the corresponding audio channel to 0 deg or 180 deg. The numbering of the string is from left to right, and each place represents a channel number. A 0 sets the phase to 0 deg and a 1 will change the phase by 180 deg.

	MISC
NonPCM-Bypass	With this setting you can switch to bypass audio processing for all non-PCM audio `on` or `off`.
Fade-Time	Fade/time is locked to 2 parameters: channel-switch and gain-change. It is used as the fade-in/out time of the channel-switch of audio channels. The old channel will be fade-out and the new channel will be fade in according to the time chosen with fade-time. Fade-Time is also used for smooth transitions when gain-values or presets are changed. These smooth transitions are triggered by a change in Gain settings or a Preset change. With this setting you can manually set this fade time between `0ms` and `10.000ms`. The default is `500ms`.
Audio-Phase	If this setting is set to *Align*, the card ensures audio-phase alignment between multiple audio channels and audio groups, which is necessary for multi-channel (surround) purposes. If errors in the signal-chain occur the de-embedder blocks reset synchronously to maintain audio-phase-alignment. If this setting is set to *Off*, the card *eats-all* audio including errors. Even if there are DBN/ANC/ECC or channel-sequence errors, the de-embedder will pass them. Be aware that audio-phase-alignment between multiple audio channels and audio groups can not be maintained if this setting is set to *Off*. **Note:** This setting can be helpful to solve problems in the field using equipment which doesn't follow the standards correctly.
AudioStatusBits	With this setting you select whether the audio status bits should be `Transparant` (same status bit on the outputs as on the inputs) or to `overwrite` them with new status bits.
Silence-Level	Here you set the threshold of the audio level when an audio signal will be reported as silent. Can be set between -100dBFS and -20dBFS. Default is -60dBFS.
Silence-Time	Here you can set the threshold in time when an audio signal will be reported as silent. Can be set between 1 and 255 seconds. Default is 10 seconds.

	S2020
Extract_Line	With this item you set a line between line 0 and line 1125 from where you want to extract the metadata from the input. By default set to line 0, which indicates Auto-Mode.
Extract_Ass_Ch	One attribute of the S2020 metadata is the association channel. The association channel is the channel to which the metadata is connected. You can select the S2020 metadata to be extracted from one of the possible associated channel pairs ranging from `Ch01/02` to `Ch15/16`. Can also be set to `None` (in case there is no association set in the S2020 source or to `Auto` (in which case the S2020 is extracted from the first available associated channel).
#S2020-Emb	With this setting you decide whether you want to `overwrite` or to switch `off` metadata (S2020) inserting. This setting is part of the main preset.
#S2020Emb_MD_Src	Here you set the metadata source of the S2020 embedder. Can be coming from the SDI input (`SDI`, default), from the Dolby E input (`DecoderOut`), from the I/O-panel RJ45 metadata input (`Local`), or from the card's internal metadata generator (`ShufflerOut`).
Insert_Line	With this setting you set a line to which the S2020 data should be inserted. Can be set between line 1 and line 1125. Default is line 9.
Insert_Method	There's 2 methods to insert S2020 (refer to the S2020 SMTPE document). Can be set to `Method A` or `Method B`. Default is `B`.
Insert_Ass_Ch	With this setting you select one of the 8 channel pairs (`Ch1/2` till `Ch15/16`) to which the metadata should be associated. Can also be set to `None` (which is also a valid value of the metadata item).

METADATA

For more information about Dolby Metadata, please read the metadata guide which you can find on the website of Dolby. The GEE/HEE2x0 has extensive metadata functionalities. The following schematics gives a visual overview on how the metadata is handled:

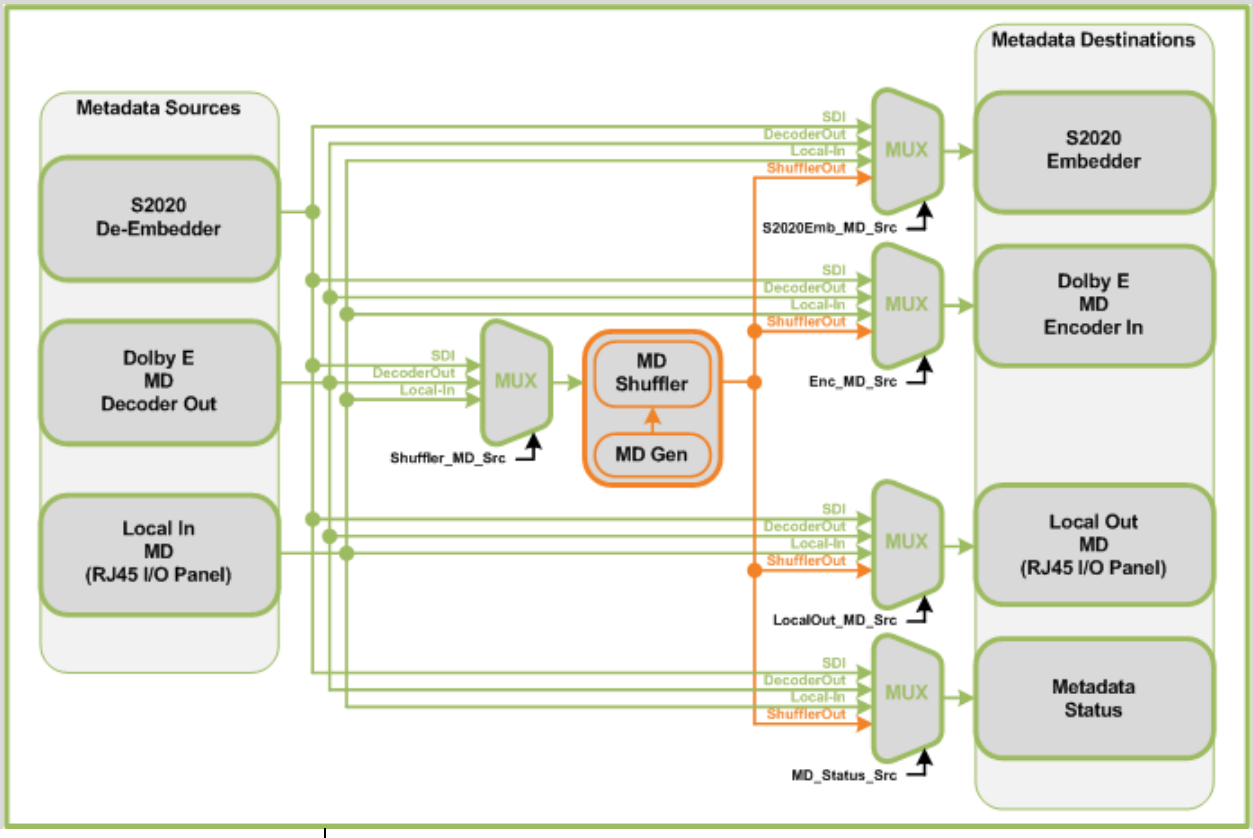

#LocalOut_MD_Src

With this setting you decide which of the metadata sources you want to use as the metadata output on the I/O-panel in the above schematic. Can be the metadata from the SDI input (`SDI`, default), from the Dolby E input (`DecoderOut`), from the I/O-panel RJ45 metadata input (`Local`), or from the card's internal metadata generator (`ShufflerOut`).

#Shuffler_MD_Src

With this setting you decide which of the metadata sources you want to use as input of the Metadata Generator/Metadata Shuffler block in the above schematic. You can select the `SDI` input, the Dolby decoder output (`DecoderOut`) or the `Local` metadata input. Default is `SDI`.

MD-Control

With this setting you decide whether you want to manually change the Metadata presets, change MD presets via the GPI contacts or change it by metadata loss detection (see setting `#MetaLoss`). A combination of GPI contact overrides with metadata loss detection is also possible. `GPI+LossDetect` only works in non-latch mode. Default is `manual`.

MD_LossDetect

With this setting you can set a metadata source on which you want to perform metadata loss detection. Can be the metadata on the `SDI` input, the metadata on the Dolby E input (`DecoderOut`) or the metadata on the `local` RJ45 input. Default is `SDI`. The actions taken when a metadata loss is detected by `MD-LossDetect` can be set with the settings `MetaLoss` and `MetaDet`.

MetaLoss

With this setting you select to which metadata preset the card should switch in case the above metadata source is lost. Can be any metadata preset (`MDPreset 1` ~ `MDPreset 7`). Can also be switched to `off`, in which case the preset will not be changed in case of a metadata loss (default).

MetaDet

With this setting you select to which metadata preset the card should switch in case metadata is detected in the above selected source. Can be any metadata preset (`MDPreset 1` ~ `MDPreset 7`).

Besides the 7 MDPresets, you can set it to `S2020-SDID`, `ProgramConfig`, `Previous` (previous active preset before the signal was lost) or `off` (don't switch presets when signal returns, default).

`S2020-SDID` switches the card to a predefined preset according to the value of the SDID:

- 00 (none) → MDPreset 8
- 01 (Ch01/02) → MDPreset 8
- 02 (Ch03/04) → MDPreset 9
- 03 (Ch05/06) → MDPreset 10
- 04 (Ch07/08) → MDPreset 11
- 05 (Ch09/10) → MDPreset 12
- 06 (Ch11/12) → MDPreset 13
- 07 (Ch13/14) → MDPreset 14
- 08 (Ch15/16) → MDPreset 14

`ProgramConfig` switches the card to a predefined preset according to the value of the metadata program configuration:

- 7.1 → MDPreset 8
- 5.1+2 → MDPreset 9
- 5.1 → MDPreset 10
- 4x2 → MDPreset 11
- 3x2 → MDPreset 12
- 2+2 → MDPreset 13
- Other → MDPreset 14

MD-LossDetect_2

You can set a second metadata loss detection on a different metadata input with this settings. It works the same as MD-LossDetect only the actions performed are defined with MetaLoss_2 and MetaDet_2. Default is `Off`.

MetaLoss_2	Same as `MetaLoss`, only for the source set with `MD-LossDetect_2`.
MetaDet_2	Same as `MetaDet`, only for the source set with `MD-LossDetect_2`.
Metadata_Preset	Here you select which Metadata preset you want to activate. Editing the preset will be live.
#MD_Preset_Name	To ease remembering which preset is used for what cases, you can name your active preset with this setting (maximum of 16 characters).
#ProgramConfig	This item sets the program configuration. Can be one of the following values: ▪ `5.1+2` ▪ `5.1` ▪ `4x2` ▪ `3x2` ▪ `2+2` ▪ `Ext_Meta` (use value as set in metadata source)
#Frame_Rate	With this you can set the metadata 'framerate' value. Can be `23.98`, `24`, `25`, `29.97`, `30`, `auto` or set to use the setting in the external metadata input (`Ext_meta`).
#MD_Prog_1	Since a bitstream can contain up to 4 separate audio streams (for instance: when the program config is 4x2) you can have 4 separate metadata sets. With `MD_Prog_1` you select which metadata set should be used for the first audio program. Can be any set from `A` to `H`. You can also choose to use the program as set in the metadata source (`Ext_Meta`), in which case the entire program is kept and no preset is used. Default is set `A`.
#MD_Prog_2	With `MD_Prog_2` you select which metadata set should be used for the second audio program (if there is any). Can be any set from `A` to `H`. You can also choose to use the program as set in the metadata source (`Ext_Meta`) , in which case the entire program is kept and no preset is used. Default is set `B`.
#MD_Prog_3	With `MD_Prog_3` you select which metadata set should be used for the third audio program (if there is any). Can be any set from `A` to `H`.

	You can also choose to use the program as set in the metadata source (`Ext_Meta`), in which case the entire program is kept and no preset is used. Default is set C.
#MD_Prog_4	With `MD_Prog_4` you select which metadata set should be used for the fourth audio program (if there is any). Can be any set from `A` to `H`. You can also choose to use the program as set in the metadata source (`Ext_Meta`), in which case the entire program is kept and no preset is used. Default is set D.
	METADATA PROG
MD_Prog_set	With this item you can select which metadata set you want to adjust parameter setting of. Possible are `A` till `H`. Default is set to parameter set `A`. All following items preceded with '`#`' are slaves of this set. Unless this setting is set to a currently in use metadata set, changing metadata settings will not have a direct effect on the output.
#MD_Prog_Type	This metadata item describes the type of content inside the assigned audio program. Can be `1ch`, `2ch`, `4ch` or `5.1ch`. This is only used as a mnemonic.
#ProgramText_src	Source of the Program Text. Can be either user defined (`Int_Meta`) or as set in the metadata source (`Ext_Meta`).
#ProgramText	Program Text. If `#ProgramText_scr` is set to `Int_Meta` this value can be set by the user. If `#ProgramText_scr` is set to `Ext_Meta` the value for this option is taken from the metadata source.
#AC3Datarate	The data rate that should be used to encode the AC-3 bitstream. You can also choose to use the metadata settings in the external program (`Ext_meta`, also default).
#Bitstrm	`Bitstream` describes the audio service contained within the Dolby Digital. A complete audio program may consist of a main audio service (a complete mix of all program audio), an associated audio service comprising a complete mix, or one main service combined with an associated service. To form a complete audio program, it may be (but rarely is) necessary to decode both main service and an associated service using a maximum total bit rate of 512 kbps, Refer to the guide to use of the ATSC digital television standard, documentA/54 for further information. Although a detailed description follows.

Bitsteam	Description
Complete	CM flags the bitstream as the Main Audio service for the program and all elements are present to form a complete audio program. Currently, this is the most common setting. The service may contain one (mono) to six (5.1) channels.
M&E	The bitstream is the main audio service for the program, minus a dialogue channel. The dialogue channel, if any, is intended to be carried by an associated dialogue service. Different dialogue services can be associated with a single ME service to support multiple channels.
Visual	This is typically a single channel program intended to provide a narrative description of the picture content to be decoded along with the main audio service. The visual service may also be a complete mix of all program channels, comprising up to six channels
Hearing	This is typically a single channel program intended to convey audio that has been processed for increased intelligibility and decode along with the main audio service. The Hearing service may also be a complete mix of all program channels
Dialogue	This is typically a single program intended to provide a dialogue channel for a Main service. If the main service contains more than two channels, the dialogue is limited to only one channel. If the ME service is two channels, the Dialogue can be a stereo pair: the appreciate channels of each service are mixed tighter (requires special decoders)
Commentary	This is typically a single channel program intended to convey additional commentary that can be optionally decoded along with the main audio service. This service differs from dialogue services because it contains an optional, rather than required, dialogue channel. The service may also be complete mix of all program channels, comprising up to six channels.
Emergency	This is a single channel service that is given priority in reproduction. When the E-service appears in the bitstream, it is given priority in the decoder and the main service is muted.
VO_Karaoke	This is a single channel service intended to be decoded and mixed to the center channel. (requires special decoders)
Ext_meta	Use the Bitstream metadata settings from an external program.

#Ch_Mode

This parameter instructs the encoder as to which inputs to use for this particular program: it tells the decoder what channels are present in this program so the decoder can deliver the audio to the correct speakers.

The setting is described as X/Y, where X is the number of front channels (left, Center, Right) and Y the number of rear (surround) channels.

Channel mode setting	Description
`1/0 ( C )`	Centre
`2/0 (LR)`	Left, Right
`3/0 (LCR)`	Left, Centre, Right
`2/1 (LRS)`	Left Right Surround
`3/1 (LCRS)`	Left Center Right Surround
`2/2 (LRS1Sr)`	Left Right Surround_Left Surround_right
`3/2 (LCRS1Sr)`	Left Center Right Surround_Left Surround_right
`Ext_meta`	Use the Channel mode metadata setting of the external program (`Ext_meta`).

#CenterMixLvl

Center downmix Level. When the encoded audio has three front channels (L, C, R), but the consumer has only two front speakers (left and right), this parameter indicates the nominal downmix level for the Center channel with respect to the Left and Right channels. Dolby Digital decoders use this parameter during downmixing in Lo/Ro mode when extended BSI parameters are not active. `0dB`, `-1.5dB`, `-3.0dB`, `-4.5dB`, `-6.0dB` and `-999dB are the possible settings`. You can also choose to use the metadata settings in the external program (`Ext_meta`, also default).

#SrndMixLvl

Surround downmix level. When the encoded audio has one or more Surround channels, but the consumer does not have surround speakers, this parameter indicates the nominal downmix level for the Surround channel(s) with respect to the Left and Right front channels. Dolby Digital decoders use this parameter during downmixing in Lo/Ro mode when extended BSI parameters are not active. `0dB`, `-1.5dB`, `-3.0dB`, `-4.5dB`, `-6.0dB` and `-999dB are the possible settings`. You can also choose to use the metadata settings in the external program (`Ext_meta`, also default).

#D_Srnd

`Dolby Surround`. Determines when a Dolby Digital decoding product also contains a Dolby Pro Logic decoder, whether the two-channel encoded bistream contains a Dolby Surround (Lt/Rt) program that requires Pro Logic decoding. Decoders can use this flag to automatically switch on Pro-logic decoding as required.

- `Not indic`, Not Indicated
- `Not Srnd`, Not Dolby surround; the bitstream contains information that was not Dolby Surround encoded.
- `Dolby Srnd`, Dolby Surround; the bitstream contains information that was Dolby Surround encoded. After Dolby Digital decoding, the bitstream is pro logic decoded.

You can also choose to use the metadata settings in the external program (`Ext_meta`). Default is `Ext_meta`.

#LFE

The status of the LFE Channel parameter indicates to a Dolby Digital encoder whether an LFE Channel is present within the bitstream. Channel mode determines whether the LFE Channel parameter can be set. You must have at least three channels in order to be able to add an LFE channel. Can be either `enable` or `disable`. You can also choose to use the metadata settings in the external program (`Ext_meta`). Default setting is `enable`.

#Dialogue_Src

Source of the Dialogue Level. Can be either user defined (`Int_Meta`) or as set in the metadata source (`Ext_Meta`).

#Dialogue_Lev

`Dialogue level` sets the average loudness of a dialogue in a presentation. The range is from `-31dB to -1dB`. This item will only influence the output if `#Dialogue_src` is set to `Int_Meta`. The default setting is `-27dB`.

#Language_Src

Source of the Language Code. Can be either user defined (`Int_Meta`) or as set in the metadata source (`Ext_Meta`).

#LanguageCode

Indicates the language of the audio service. This item will only influence the output if `#Language_src` is set to `Int_Meta`. Language codes can be found in **SMPTE RDD 6-2008** *"Description and Guide to the Use of the Dolby E Audio Metadata Serial Bitstream"*

NOTE: The ATSC Standard A52/B, Digital Audio Compression Standard (AC-3, E-AC-3), Revision B, 14 June 2005 no longer uses the language code parameter to indicate the program language. For ATSC DTV applications, the language code shall be set to "0" (not applicable)

#AudioProdInfo	This item lets you select whether or not you want to use the production mixing level parameter or not. Choices are between `Enabled` or `Disabled`. Default is Disabled.
#ProdMixLvl_Src	Source of the production mixing level parameter. Can be either user defined (`Int_Meta`) or as set in the metadata source (`Ext_Meta`).
#ProdMixLvl	The audio production mixing level parameter describes the peak sound pressure level (SPL) used during the final mixing session at the studio or on the dubbing stage. The parameter allows an amplifier to set its volume control such that the SPL in the replay environment matches that of the mixing room. This control operates in addition to the dialogue level control, and is best thought of as the final volume setting on the consumer's equipment. This value can be determined by measuring the SPL of pink noise at studio reference level and then adding the amount of digital headroom above that level. For example, if 85 dB equates to a reference level of –20 dBFS; the mixing level is 85 + 20, or 105 dB. Can be set to any value between 80 and 111 dB. This item will only influence the output if `#Prod_Mix_LvlSrc` is set to `Int_Meta`. The default setting is `0`.
#ProdRoomType	The Room Type parameter describes the equalization used during the final mixing session at the studio or on the dubbing stage. A `Large` room is a dubbing stage with the industry standard X-curve equalization; a `Small` room has flat equalization. This parameter allows an amplifier to be set to the same equalization as that heard in the final mixing environment. Can also be set to `Not Indicated` or set to use the metadata settings in the external program (`Ext_meta`).
#AC3Copyright	AC3 copyright bit. Here you set the copyright bit to either `Yes` or `No`. You can also choose to use the metadata settings in the external program (`Ext_meta`).
#AC3OrigBitstr	AC3 original bitstream. Here you set whether the incoming signal is of the original master bitrate (`yes`) or if it has been converted before (`no`). You can also choose to use the metadata settings in the external program (`Ext_meta`).
#Pref_Dwnmx	Preferred Down mix. This parameter allows the user to select either Lt/Rt or the Lo/Ro downmix in a consumer decoder that has stereo outputs. Consumer receivers are able to override this selection, but this parameter provides the opportunity for a 5.1 channel soundtrack to play in `Lo/Ro` mode without user intervention. This is especially useful on music material. `NOT indicated`, `Lt/Rt` and `Lo/Ro` are the possible mix types. You can also choose to use the metadata settings in the external program (`Ext_meta`). Default is `Ext_meta`.

#Lt/Rt_C_dwnmx

Lr/Rt Center Mix Level. This setting indicates the level shift applied to the center channel when adding to the left and right outputs when downmixing to an Lt/rt output. Its operation is similar to the surround downmix level in the Universal metadata. `+3dB`, `+1.5dB`, `0dB`, `-1.5dB`, `-3.0dB`, `-4.5dB`, `-6.0dB` and `-999dB`. You can also choose to use the metadata settings in the external program (`Ext_meta`). Default is `Ext_meta`.

#Lt/Rt_S_dwnmx

LtRt Surround Mix level. This setting indicates the level shift applied to the surround channels when downmixing to an Lt/Rt output. Its operation is similar to the surround downmix level in the universal metadata. `-1.5dB`, `-3.0dB`, `-4.5dB`, `-6.0dB` and `-999dB`. You can also choose to use the metadata settings in the external program (`Ext_meta`). Default is `Ext_meta`.

#Lo/Ro_C_dwnmx

Lo/Ro Center mix level. This setting indicates the level shift applied to the center channel when adding to the left and right outputs when downmixing to a Lo/Ro output. When Extended BSI parameters are active, this parameter is used and the Center Mix Level parameter in the universal parameters is `not`. `+3dB`, `+1.5dB`, `0dB`, `-1.5dB`, `-3.0dB`, `-4.5dB`, `-6.0dB` and `-999dB`. You can also choose to use the metadata settings in the external program (`Ext_meta`). Default is `-3dB`.

#Lo/Ro_S_dwnmx

Lo/Ro Surround Mix level. This setting indicates the level shift applied to the surround channels when downmixing to a Lo/Ro output. When extended BSI parameters are active, this parameter is used, and the surround mix level parameter in the universal parameters is not. `-1.5dB`, `-3.0dB`, `-4.5dB`, `-6.0dB` and `-999dB`. You can also choose to use the metadata settings in the external program (`Ext_meta`). Default is `-3dB`.

#Dolby_Srnd_EX

Surround EX. This setting is used to identify the encoded audio as surround EX encoded material. This parameter is only used if the encoded audio has two surround channels. An amplifier or receiver with Dolby Digital EX decoding can use this parameter as a flag to switch the decoding on or off automatically. The behavior is similar to the Dolby Surround Mode parameter. `Not Indic.`, `NotDolbySrnd`, `DolbySrnd`. You can also choose to use the metadata settings in the external program (`Ext_meta`). Default is `Ext_meta`.

#D_HeadPhone

This metadata item indicates whether or not the program has been Dolby Headphone-encoded. This information is not used by the Dolby decoder, but may be used by other portions of the audio reproduction equipment. Can be set to `Not Indicated`, `Headph` (meaning: audio is Dolby Headphone encoded) or `Not_Headph` (meaning: audio is not Dolby Headphone encoded). You can also choose to use the metadata settings in the external program (`Ext_meta`). Default is `Ext_meta`.

#ADConvType

This parameter allows audio that has passed through a particular A/D conversion stage to be marked as such, so that a decoder may apply the complementary D/A process. Can be set to `Standard` or `HDCD`. You can also choose to use the metadata settings in the external program (`Ext_meta`). Default is `Ext_meta`.

#DC_filter

DC filter. This setting determines whether a DC blocking 3Hz highpass filter is applied to the main inputs channels of a Dolby Digital encoder prior encoding. This parameter is not carried to the consumer decoder. It is used to remove DC offsets in the program audio and would only be switched off in exceptional circumstances. `On` this function is active, `OFF` this function is not active. You can also choose to use the metadata settings in the external program (`Ext_meta`). Default is `Ext_meta`.

#Lowpass_Filter

Lowpass Filter. This setting determines whether a lowpass filter is applied to the main input channels of a Dolby Digital encoder to encode. This filter removes high frequent signals that are not encoded. At the suitable data rates this filter operates above 20 kHz. In all cases it prevents aliasing on decoding and is normally switched on. This parameter is not passed to the consumer decoder. `On` this function is active, `OFF` this function is not active. You can also choose to use the metadata settings in the external program (`Ext_meta`). Default is `Ext_meta`.

#LFE_Filter

LFE lowpass filter. This setting determines whether a 120Hz 8 order lowpass filter is applied to the LFE channel input of a Dolby Digital encoder prior to encoding. It is ignored if the LFE channel is disabled. This parameter is not sent to the consumer decoder. The filter removes frequencies above 120Hz that would aliasing when decoded. This filter should only be switched off if the audio to be encoded is known to have no signal above 120 Hz. `On` this function is active, `OFF` this function is not active. You can also choose to use the metadata settings in the external program (`Ext_meta`). Default is `Ext_meta`.

#Srnd_Ph_Shift

Surround Phase Shift. This setting takes care that the Dolby Digital encoder applies a 90-degree phase shift to the surround channels. This allows a Dolby Digital decoder create an Lt/Rt downmix simply. For most material the phase shift has a minimal impact when the Dolby Digital program 1 decoded to 5.1 channels, but provides an Lt/Rt output that can be Prologic decoded to L, C, R ,S if desired. However, for some phase-critical material (such as music) this phase shift is audible when listening in 5,1 channels. Likewise some material downmixes to a satisfactory Lt/Rt signal without needing this phase shift. It is therefore important to balance the needs of the 5.1 mix and the Lt/Rt downmix for each program. `On` this function is active, `OFF` this function is not active. You can also choose to use the metadata settings in the external program (`Ext_meta`). Default is `Ext_meta`.

#Srnd_3dB_Atten

Surround 3dB attenuation. This setting determines whether the surround channels are attenuated 3 dB before encoding. The attenuation actually takes place inside the Dolby Digital encoder. It balances the signals levels between theatrical mixing rooms (dubbing stages) and consumer mixing rooms (dvd or tv studios) Consumer mixing rooms are calibrated so that all five main channels are at the same sound pressure level (SPL). For compatibility reasons with older film formats, theatrical mixing rooms calibrate the surround channels 3dB lower in SPL that the front channels. The consequence is that signal levels on tape are 3dB louder. Therefore, to convert to a consumer mix from theatrical calibration it is necessary to reduce the surround levels by 3dB. `On` = this function is active, `OFF` = this function is not active. You can also choose to use the metadata settings in the external program (`Ext_meta`). Default is `Ext_meta`.

#RfMode

`RfMode` has the same options as `Line`, but each option is `11 dB` more sensitive to avoid overloading the RF input of a television. `None, Film stnd, Film light, Music stnd, Music light` and `speech`. You can also choose to use the metadata settings in the external program (`Ext_meta`).Default is `Ext_meta`.

#Line

`Line` sets the Dynamic range metadata of presets.

- `NONE`, no dynamic range compression is applied unless downmixing could cause overload, in which case protection dynamic range is automatically applied.
- `Film stnd`, Applies more compression to a subjectively loud film that requires dynamic range restriction.
- `Film Light`, Applies light compression to a subjectively quiet film that does not require dynamic range restriction.
- `Music Stnd`, Applies more compression to music that is not compressed and requires dynamic range restriction.
- `Music light`, Applies light compression to music that is already compressed and does not require excessive dynamic

	range restriction. ▪ `Speech`, Appropriate for programs with predominantly dialogue. You can also choose to use the metadata settings in the external program (`Ext_meta`). Default is `Ext_meta`.
MD_Status_Src	In the status menu the status of all the metadata parameters of one metadata set can be monitored. With this setting you select which metadata set you want to monitor. Can be the `ShufflerOut`, `DecoderOut`, `Local` or `SDI`. Refer to schematic in the Metadata header of the metadata settings for a visual explanation. Can also be switched to `off`, in which case there will be no status monitoring of metadata (default).
MD_Status_Pgm	With this item you select which program out of the above selected metadata set you want to monitor. Can be 1 till 8. Default is 1.
RestartCAT1100	With this setting you can reset the Dolby board (CAT100) without resetting the Synapse board. When switched to `reset` the setting will automatically go back to `No Reset` after the CAT board is restarted.
Dolby_firmware	Please only change to `No_Update` when told so by EVS Support.
Category	Only used by EVS or Dolby
Parameter	Only used by EVS or Dolby

6 Status Menu

Introduction

The status menu indicates the current status of each item listed below.

SDI-Input_1

This status item indicates the presence and format of a valid signal in input 1. This is displayed as:

- `1080p60`
- `1080p50`
- `1080p30`
- `1080p25`
- `1080p24`
- `1080i60`
- `1080i50`
- `720p60`
- `720p50`
- `SD625`
- `SD525`
- `NA`

SDI-Input_2

This status item indicates the presence and format of a valid signal in input 2. Displayed the same as described under `SDI-Input_1`.

SDI-Map_1

Displays whether the 3Gb/s input on input 1 is mapped as `Level A` or `Level B`. If the input is not 3Gb/s (1080p50 or 1080p60) this item indicates `NA`.

SDI-Map_2

Displays whether the 3Gb/s input on input 2 is mapped as `Level A` or `Level B`. If the input is not 3Gb/s (1080p50 or 1080p60) this item indicates `NA`.

SDI-Freq_1

Indicates the frequency of SDI input 1. Can be `1:1`, `1:1.001` or `NA`.

SDI-Freq_2

Indicates the frequency of SDI input 2. Can be `1:1`, `1:1.001` or `NA`.

CRC-Stat_1

Displays if there are CRC errors on input 1.

CRC-Stat_2

Displays if there are CRC errors on input 2.

Ref-Format

Displays the reference format. Can be one of the following:

- NA
- NTSC/480i
- PAL/576i
- 480p
- 576p
- 720p
- 1080i
- 1080p

Phaser1_H_Pos

This item shows the distance of SDI-Input1 to REF timing (write-read timing) of the autophaser. It is directly related to a correct function of the autophaser. When the SDI-Input1 to REF-timing is close, the function of the autophaser gets critical. The setting Phaser1-Offset can be used to tune the Phaser1_H_Pos.

When Phaser-Status setting is set to Off, or when Lock Mode is set to SDI1, SDI2 or Auto-SDI, or when Lock-Mode is set to Ref1 or Ref2 and status-item Ref-Format shows NA, then Phaser1_H_Pos will show: 0px.

Phaser2_H_Pos

This item shows the distance of SDI-Input2 to REF timing (write-read timing) of the autophaser. It is directly related to a correct function of the autophaser. When the SDI-Input2 to REF-timing is close, the function of the autophaser gets critical. The setting Phaser2-Offset can be used to tune the Phaser2_H_Pos.

When Phaser-Status setting is set to Off, or when Lock Mode is set to SDI1, SDI2 or Auto-SDI, or when Lock-Mode is set to Ref1 or Ref2 and status-item Ref-Format shows NA, then Phaser2_H_Pos will show: 0px.

Phaser1_Stat

This item shows the status of the autophaser. It uses the value shown in Phaser1_H_Pos to calculate 3 working regions for the autophaser: Safe, Warning and Critical.

Safe: Phaser1_H_Pos shows a value > 50px
Warning: Phaser1_H_Pos shows a value > 20px and < 50px
Critical: Phaser1_H_Pos shows a value < 20px

When Phaser-Status setting is set to Off, or when Lock Mode is set to SDI1, SDI2 or Auto-SDI, or when Lock-Mode is set to Ref1 or Ref2 and status-item Ref-Format shows NA, then Phaser1_Stat will show: NA.

Phaser2_Stat	This item shows the status of the autophaser. It uses the value shown in `Phaser2_H_Pos` to calculate 3 working regions for the autophaser: `Safe`, `Warning` and `Critical`. `Safe: Phaser2_H_Pos` shows a value > 50px `Warning: Phaser2_H_Pos` shows a value > 20px and < 50px `Critical: Phaser2_H_Pos` shows a value < 20px When `Phaser-Status` setting is set to `Off`, or when `Lock Mode` is set to `SDI1`, `SDI2` or `Auto-SDI`, or when `Lock-Mode` is set to `Ref1` or `Ref2` and status-item `Ref-Format` shows `NA`, then `Phaser2_Stat` will show: `NA`.
SDI1-Ref_Offset	This item indicates the offset between SDI1 and the reference (if present).
SDI2-Ref_Offset	This item indicates the offset between SDI2 and the reference (if present).
Locked-To	Displays to what the card is locked: `Ref`, `SDI1`, `SDI2`, or `Not Locked`.
Active-Out1	Displays what the current active output is on SDI output 1. Can be `SDI1` or `SDI2`
Active-Out2	Displays what the current active output is on SDI output 2. Can be `SDI1` or `SDI2`
IO-Delay_1	Displays the I/O delay between the input and the output. Only indicated when `Delay-Status` is set to `on`.
GPI	Displays the currently active GPI value (1 to 7). 0 indicates there's no GPI input active.
ATC_Stat	Detects a `present` ATC timecode signal. When no ATC signal is detected, `NA` is indicated. When a invalid ATC signal is detected, this item indicates `Error`.
ANC_Stat	Shows the status of the ancillary data. Can be NA, OK or error.
GrpInUse	Displays which groups are in use on the active input. Displayed as for instance 1_3_ when groups 1 and 3 contain audio and for instance _234 when groups 2, 3 and 4 contain audio.

Grp-Ins

When the setting #Emb1_Mode of embedder is set to Append and the video source at the embedder already contains embedded audio, this status item will generate an Error if the selection #Emb1_GrpSel is set to the same group number as the present audio. The embedder will stop embedding. If #Emb1-Mode is set to Overwrite the present audio data will be lost, and replaced by the new audio data. If #Emb1-Mode is set to Overwrite, no Grp-Ins error can occur. If an error does not occur Grp-Ins will indicate Ok.

DecInFrmt01/02

Displays the format of the audio on the decoder input. Can be one of the following:

- NA
- PCM
- Null
- AC-3
- TimeStmp
- MPEG-1
- MPEG-2
- SMPTE-KLV
- Dolby E
- Caption data
- UserDef
- Enhanced AC-3
- AC-4

EmbSOF-EIn01/02 ~ EmbSOF-EIn15/16

These items display in which line the first package (Start-of-Frame) of non PCM audio and data in the corresponding audio pair is detected.

AddOnFrmtIn01/02 ~ AddOnFrmtIn31/32

Displays the format of the corresponding addon input channels. Same formats can be detected as displayed under DecInFrmt01/02.

ADProg1-Stat ~ ADProg2-Stat
(GEE-HEE230 only)

Displays the status of the corresponding ADProg input-channel. Can be OK, NA or Clipped (meaning the audio is clipping).

AD-Stat
(GEE-HEE230 only)

Displays the status of the AD input channel. Can be OK, NA or Clipped (meaning the audio is clipping).

ADControl-Stat
(GEE-HEE230 only)

Displays the status of the ADControl input channel. Can be OK, NA or Error.

EmbStatOutA1 ~ EmbStatOutD4	Display the status of each individual embedder output channels. Can be `OK`, `NA` or `Clipped` (meaning the audio is clipping).
EmbFrmtOutA1/2 ~ EmbFrmtOutD3/4	Indicates the format of the outputs of the embedders. Can indicate the Same formats as displayed under `DecInFrmt01/02`.
SDIS2020Stat	This item indicates the status of the SDI S2020 metadata input. Can be `OK`, `error` or `NA`.
S2020-Src_Method	This status indicates the S2020 Mapping Method as present on the current SDI S2020 source. Can be `NA` (not available), `Method A` or `Method B`.
S2020-Src_Ass_Ch	Shows the S2020 SDID association channel. Can be `None`, `NA` (not available) or `Ch01/02` ~ `Ch15/16`.
SDIS2020Prog	This status indicates the program config as present on the current SDI S2020 source. Can be one of the following values: ▪ `5.1+2` ▪ `5.1+1+1` ▪ `4+4` ▪ `4x2` ▪ `8x1` ▪ `5.1` ▪ `3x2` ▪ `6x1` ▪ `2+2` ▪ `7.1` ▪ `Other` ▪ `NA`
DecMetaStat	This item indicates the status of the decoder metadata output. Can be `OK`, `error` or `NA`.
DecMetaProg	Indicates the program config as present in the Dolby E decoder metadata output. Refer to the `SDIS2020Prog` item for the list of possible values.
LocMetaStat	This item indicates the status of the local metadata input (RJ45 backplane). Can be `OK`, `error` or `NA`.
LocMetaProg	Indicates the program config as present in the local metadata input. Refer to the `SDIS2020Prog` item for the list of possible values.

The source of the following status items (preceded with 'MD' prefix) is dependent on the `MD_Status_Src` and `MD_Status_pgm` settings.

MD_ProgramConfig	This status indicates the program config as present on the metadata preset selected with `MetaDet`. Can be one of the values listed under `SDI1S2020Prog`.
MD FrameRate	Indicates the value of the frame rate metadata parameter.
MD ProgramText	Displays the program's text field (set with #Program_txt).
MD AC3Datarate	Indicates the value of the AC3 bitrate metadata parameter.
MD Bitstream	Indicates the value of the bitstream mode metadata parameter.
MD ChannelMode	Indicates the value of the channel mode metadata parameter.
MD CenterMixLvl	Indicates the value of the Center downmix level metadata parameter.
MD SrndMixLvl	Indicates the value of the surround downmix level metadata parameter.
MD D_Surnd	Indicates the value of the Dolby surround metadata parameter.
MD LFE	Indicates the value of the LFE channel metadata parameter.
MD Dialog Lvl	Indicates the value of the dialogue level metadata parameter.
MD LanguageCode	Indicates the value of the language code metadata parameter.
MD AudioProdInfo	Indicates the value of the audio production info metadata parameter.
MD ProdMixLvl	Indicates the value of the audio production mix level metadata.
MD ProdRoomType	Indicates the value of the audio production room type metadata.

MD AC3Copyright	Indicates the value of the AC3 copyright metadata parameter.
MD AC3OrigBitstr	Indicates the value of the AC3 original bitstream metadata parameter.
MD Pref. Dwnmx	Indicates the value of the preferred downmix metadata parameter.
MD Lt/RtCDwnmx	Indicates the value of the Lt/Rt center downmix metadata parameter.
MD Lt/RtSDwnmx	Indicates the value of the Lt/Rt surround downmix metadata parameter.
MD Lo/RoCDwnmx	Indicates the value of the Lo/Ro center downmix metadata parameter.
MD Lo/RoSDwnmx	Indicates the value of the Lo/Ro surround downmix metadata parameter.
MD D_Srnd Ex	Indicates the value of the Dolby surround EX metadata parameter.
MD D_HeadPhone	Indicates the value of the Dolby headphone metadata parameter.
MD ADConvType	Indicates the value of the A/D conversion type metadata parameter
MD DC Filter	Indicates the value of the DC filter metadata parameter.
MD Lowpass Fil	Indicates the value of the Low pass filter metadata parameter.
MD LFE Filter	Indicates the value of the LFE filter metsdata parameter.
MD Sur PhShift	Indicates the value of the surround phase shift metadata.
MD Sur3d Att	Indicates the value of the surround 3dB attenuate metadata.
MD RFPreEmph	Indicates the value of the RF pre emphasis metadata parameter.

MD RF Mode	Indicates the value of the RF mode metadata parameter.
MD Line Mode	Indicates the value of the line mode metadata parameter.
Nr_programs	This status item indicates the number of programs that are available in the Dolby decoder. This is dependent on the program config.
Bit_Depth	Indicates the value of the bit depth metadata parameter.
Mix_meta	Indicates the presence of the mixing parameters for individual channel scaling metadata parameter.
Mix_Control	Indicates the value of the mixing control metadata parameter.
DDpRATE	This indicates the DD+ bitrate.
DDpStream	Indicates the status of the DD+ stream: ▪ I0 : 1/0 through 5.1-channel main audio stream ▪ I0, I1 : main plus AD; single packet identifier [PID] ▪ I0, D0 : 7.1 channels
Dec_frame	Shows at which rate the decoder is running.
Enc_frame	Shows at which rate the encoder is running.
Value	Only used by EVS
FPGA-Stat	Displays the status of the FPGA chip. Can be error or OK.
DM-D_Type	Displays which the type of I/O board is currently detected on circuit D. For the GEE/HEE2x0 this should always be the `CAT1100`.
DM-D_Status	Indicates the status of I/O board D, can be OK, NA or Error.

7 Events Menu

Introduction

An event is a special message that is generated on the card asynchronously. This means that it is not the response to a request to the card, but a spontaneous message.

What is the Goal of an event?

The goal of events is to inform the environment about a changing condition on the card. A message may be broadcast to mark the change in status. The message is volatile and cannot be retrieved from the system after it has been broadcast. There are several means by which the message can be filtered.

Events

The events reported by the card are as follows;

Announcements

`Announcements` is not an event. This item is only used for switching the announcement of status changes on/off. 0=off, other =on

Input_A

Input_A can be selected between 0 .. 255. 0= no event, 1..255 is the priority setting.

Input_B

Input_B can be selected between 0 .. 255. 0= no event, 1..255 is the priority setting.

CRC-Status1

CRC-status1 can be selected between 0 .. 255. 0= no event, 1..255 is the priority setting.

CRC-Status2

CRC-status2 can be selected between 0 .. 255. 0= no event, 1..255 is the priority setting.

Ref-Status

Reference can be selected between 0 .. 255. 0= no event, 1..255 is the priority setting.

Lock-Status

Lock status can be selected between 0 .. 255. 0= no event, 1..255 is the priority setting.

DolbyLoss-Status

Reference can be selected between 0 .. 255. 0= no event, 1..255 is the priority setting

What information is available in an event?

The message consists of the following items;

1) A message string to show what has happened in text, for example: “INP_LOSS”, “REF_LOSS”, “INP_RETURN”.
2) A tag that also shows what happens, but with a predefined number: e.g. 1 (= loss of input), 2 (= loss of reference), 129(= 1+128 = return of input). For a list of these predefined tags see the table on the next page.
3) A priority that marks the importance of an event. This value is defined by the user and can have any value between 1 and 255, or 0 when disabled.
4) A slot number of the source of this event.

The Message String

The message string is defined in the card and is therefore fixed. It may be used in controlling software like Synapse Set-up to show the event.

The Tag

The tag is also defined in the card. The tag has a fixed meaning. When controlling or monitoring software should make decisions based on events, it is easier to use the tag instead of interpreting a string. The first implementation is the tag controlled switch in the GPI16.

In cases where the event marks a change to fault status (e.g. 1 for Loss of Input) the complement is marked by the tag increased by 128 (80_{hex}) (e.g. 129 (81_{hex}) for Return of Input).

Defining Tags

The tags defined for the card are:

Event Menu Item	Tag		Description
Announcements	0 or NA	0 or NA	Announcement of report and control values
Input_A	01_{hex}=INPA_LOSS	81_{hex}=INPA_RETURN	input A lost or returned
Input_B	12_{hex}=INPB_LOSS	92_{hex}= INPB_RETURN	input B lost or returned
CRC-Status1	03_{hex}=CRC1_ERROR	83_{hex}=CRC1_OK	CRC1 error or OK
CRC-Status2	43_{hex}=CRC2_ERROR	$c3_{hex}$=CRC2_OK	CRC2 error or OK
Ref-Stats	02_{hex}=REF_LOSS	82_{hex}=REF_RETURN	Reference lost or returned
Lock-Status	11_{hex}=INP_NO_LOCK	91_{hex}=INP_LOCK	Input not locked or input locked
DolbyLoss-Status	05_{hex}=DOLBY_LOSS	85_{hex}=DOLBY_RETURN	Dolby lost or returned

The Priority

The priority is a user-defined value. The higher the priority of the alarm, the higher this value. Setting the priority to Zero disables the announcement of this alarm. Alarms with priorities equal or higher than the Error Threshold setting of the RRC will cause the error LED on the Synapse rack front panel to light.

The Address

Together with the message string or the tag, the slot number or address of the card is relevant to be able to assign the event to a certain card.

8 LED Indication

Error LED	The error LED indicates an error if the internal logic of the GEE/HEE2x0 card is not configured correctly or has a hardware failure.
Input_1 LED	This LED indicated the presence of a valid SDI video signal on input 1.
Input_2 LED	This LED indicated the presence of a valid SDI video signal on input 2.
ANC Data_1 LED	Indicates the presence of embedded audio within input 1.
ANC Data_2 LED	Indicates the presence of embedded audio within input 2.
Reference LED	Indicated the presence of a valid reference signal on the selected reference input connector (ref-1 or ref-2).
Data Error_1 LED	This LED indicates a CRC error on input 1.
Data Error_2 LED	This LED indicates a CRC error on input 2.
Connection LED	This LED illuminates after the card has initialized. The LED lights for 0.5 seconds every time a connection is made to the card.
Error LED	The error LED indicates an error if the internal logic of the card is not configured correctly or has a hardware failure.
DM_1 Pres	Indicates if an I/O board is detected on position 1
DM_2 Pres	Indicates if an I/O board is detected on position 2
DM_1 Error	Indicates if there is an error on I/O board 1
DM_2 Error	Indicates if there is an error on I/O board 2

9 Block Schematic

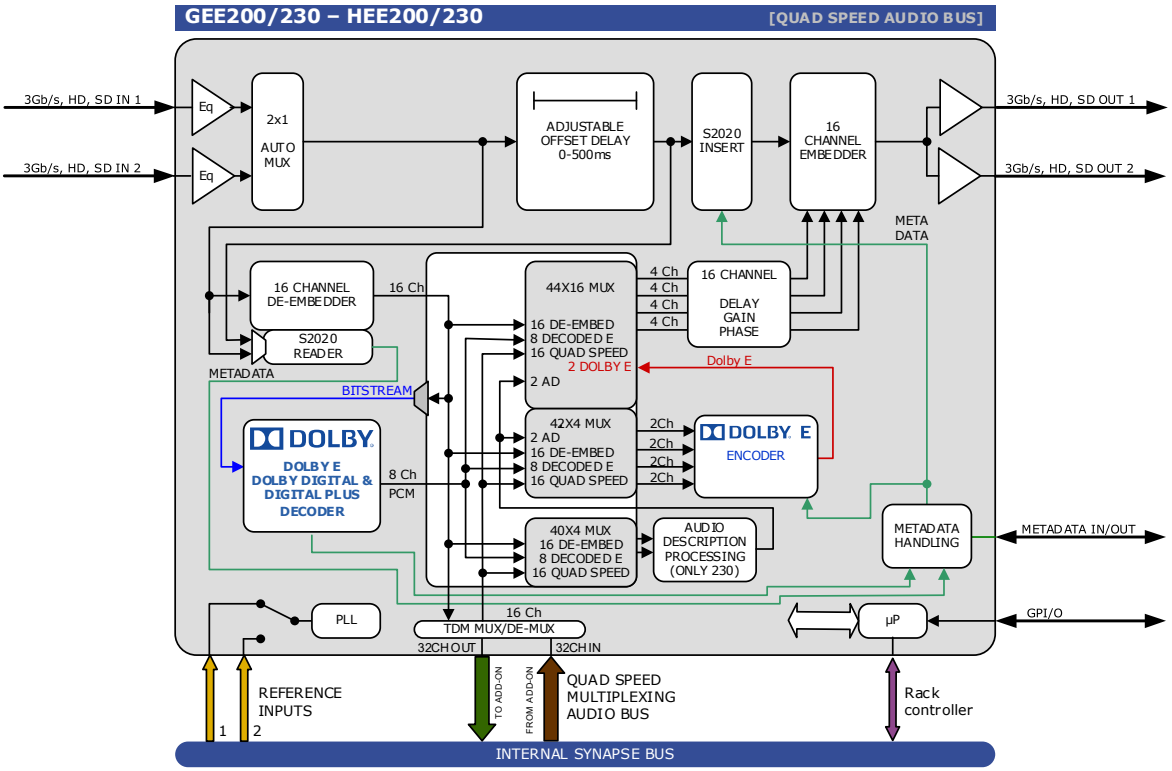

10 Connector Panels

The GEE-HEE2x0 can be used with the BPH18, the BHX18D or the bypass relay equivalents. The following table displays the pinout of these backpanels in combination with the card.

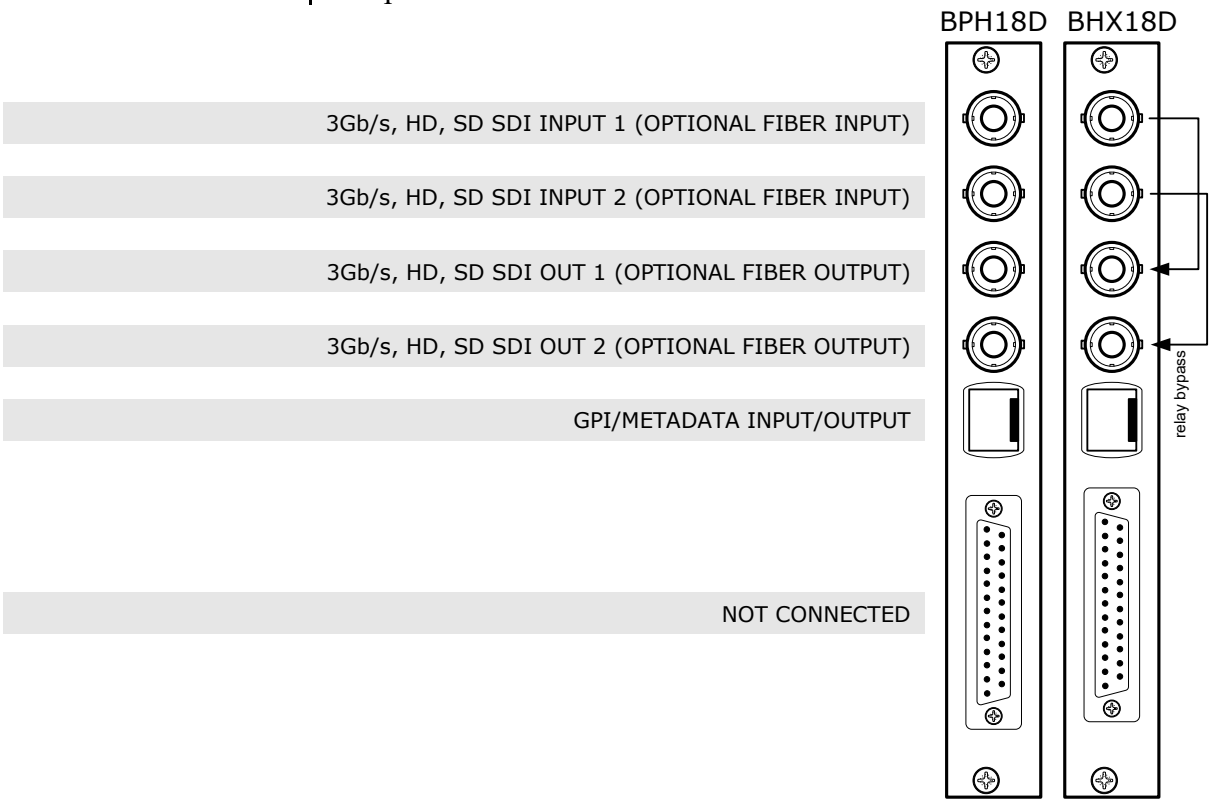

!Unused inputs and outputs must be terminated with the correct impedance!

GPI pinning

Pin	Function
1	Ground
2	GPI 1
3	GPI 2
4	GPI 3
5	TXA asynchronous data out + / GPI 4
6	TXB asynchronous data out - / GPI 5
7	RXA asynchronous data in + / GPI 6
8	RXB asynchronous data in - / GPI 7

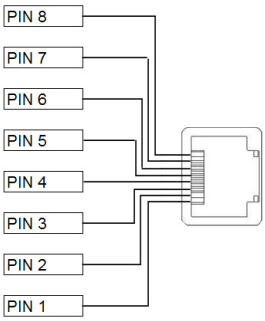

Appendix 1: Metadata Preset Modes

Metadata Mux mode

In this mode the user selects Metadata Sources and connects them to Metadata Destinations. The MetadataShuffler can be setup as a pre-defined generator and can become one of the selectable Metadata Sources. As the MetadataShuffler is setup as generator no Metadata Source manipulation is possible. The behavior of the Metadata Mux-Mode can be controlled by defining **Main-Presets** which are controlled using the **Main Preset-Control** functionality.

Note: All names of the settings in this document are referred to the settings as shown in the Classic View of Cortex).

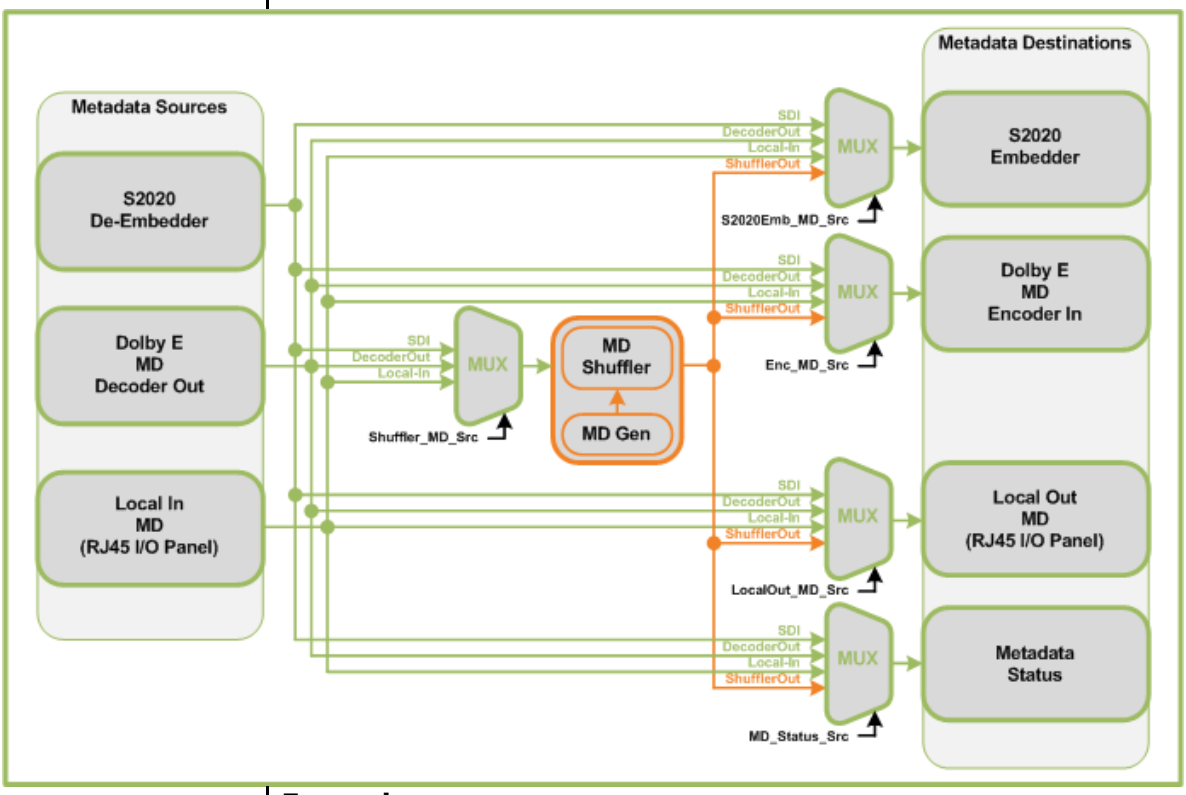

Example:
Switching Main Presets based on Dolby-E Loss/Detect at the E-Decoder.
Metadata of the E-Decoder or MetadataShuffler is routed to the E-Encoder.

When Dolby-E audio is detected then its associated metadata is routed to the input of the E-Encoder. In the absence of Dolby-E audio the MetadataShuffler (setup as generator) is routed to the input of the E-Encoder. For this, set:

Preset-Control = LossDetect
Source = DolbyE
Loss=Preset 1: MetadataShuffler (set as a standalone metadata generator)
Detect=Preset 2: DecoderOut-Metadata
Preset 1: #Enc_MD_Src=ShufflerOut
Preset 2: **#Enc_MD_Src=DecoderOut**

The MetadataShuffler should be configured as a standalone generator and be pre-defined. The MetadataShuffler is changing into a standalone generator when a value other than **Ext_Meta** is chosen for **#ProgramConfig** (5.1, 5.1+2, 2.0 etc.). In this mode it is not important to present a valid metadata signal to its input (selected with **#Shuffler_MD_Src**). If **#ProgramConfig**=**Ext_Meta** then the MetadataShuffler MUST have a valid metadata input signal to function correctly.

Metadata Preset Control is not used in this example as the MetadataShuffler is static and pre-defined. The Metadata Preset Control can be disabled by setting:
MD_Preset Control=Manual, MD_Loss=Off, MD_Detect=Off

Metadata Shuffler mode

In this mode the user has full control of the MetadataShuffler. Metadata input to the MetadataShuffler can be manipulated or transparently routed to its output. In the absence of metadata the MetadataShuffer can generate a pre-defined set of metadata. The behavior of the MetadataShuffler can be controlled by defining **MD-Presets** which are controlled using the **Metadata Preset-Control** functionality.

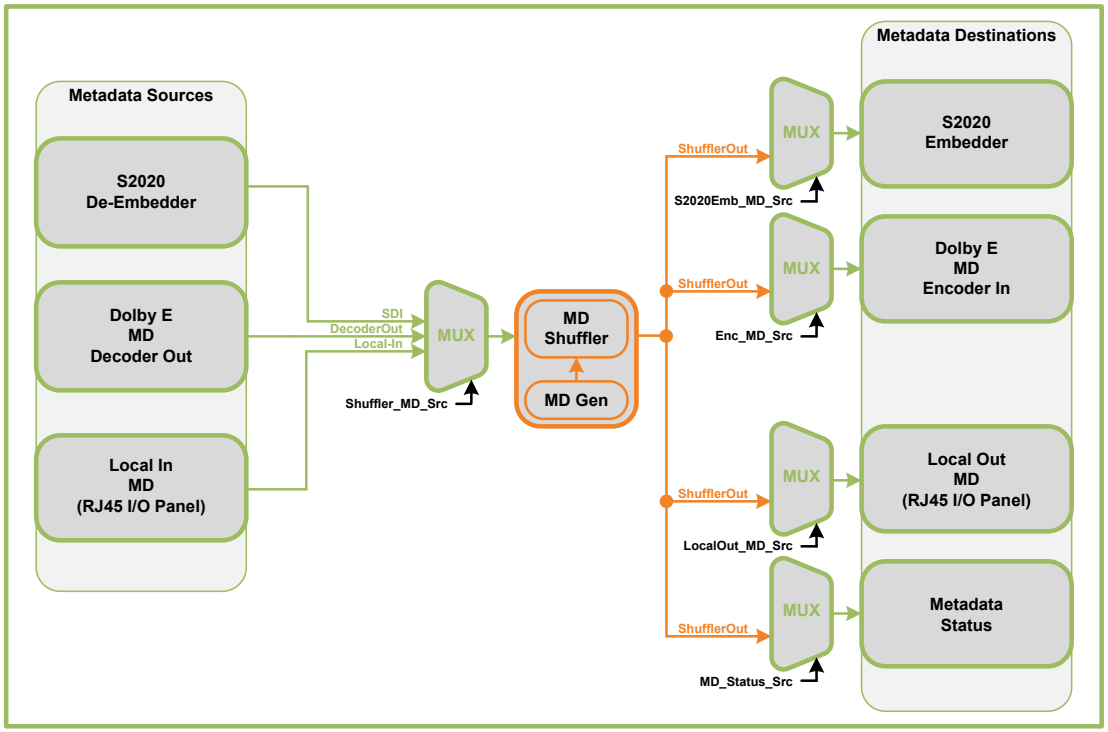

Example:
Switching MD-Presets based on Metadata Loss/Detect at the E-Decoder Output. Metadata of the E-Decoder is routed through the MetadataShuffler into E-Encoder.

The metadata output of the E-Decoder is connected to the input of the MetadataShuffler. The output of the MetadataShuffler is connected to the input of the E-Encoder. For this, set (for all Main Presets):
#Shuffler_MD_Src = DecoderOut
#Enc_MD_Src = **ShufflerOut**

When E-Decoded metadata is detected it can be manipulated or routed transparently through the MetadataShuffler using a pre-defined **MDPreset** selected with **MetaDet**. In absence of E-Decoded metadata the MetadataShuffler starts generating a pre-defined metadata set by the selected **MDPreset** at **MetaLoss**. For this, set:

MD-Control = LossDetect
MD-LossDetect = DecoderOut
MetaLoss = MDPreset 1: MetadataShuffler (set as a standalone metadata generator)
MetaDet = MDPreset 2: DecoderOut-Metadata through MetadataShuffler

If the Metadata at the input of the MetadataShuffler (selected with **#Shuffler_MD_Src**) is present and should be 100% transparent routed to its output, without manipulation, then the user should set the following values correctly to avoid accidentally overwriting of single metadata values:
#ProgramConfig = Ext_Meta
#FrameRate = Ext_Meta
#MD_Prog_1,2,3 and 4 = Ext

Main Preset Control is not used in this example as the metadata routing is static. The Main Preset Control can be disabled by setting:
Preset Control=Manual, Loss=Off, Detect=Off

General Preset Notes

Some settings need special attention as they can generate (unwanted) audio clicks and plops while switching Main-Presets and/or MD-Presets.

DD(+)-Encoder (if supported):
It is preferred not to change the setting **#Enc-Config** between presets. If possible chose one value for all Main-Presets. (the setting **#Enc-Config** is called **Audio Coding** in Cortex-Tab Dolby Decoder/Encoder)

Changing this setting between presets will force a full reset to the DD(+)-Encoder, this is never seamless (a glitch in the Encoded output stream as a result). Once the **#Enc-Config** is set for air-use, don't change it but change the metadata. Therefore the **#Enc-Config** selected needs to support the highest denominator of the mode that you want to support.

Example: The **#Enc-Config** for the Dolby Encoder is set to **5.1+2**. Which means two encoders running: Enc1=5.1(max) and Enc2=2/0(max). This defaults to acmod=3/2+2/0. As the metadata overwrites the acmod it allows any subset format to be supported: (Enc1=3/2, 2/2, 3/1, 2/1, 3/0, 2/0 or 1/0) and (Enc2=2/0 or 1/0).

Audio-Embedding:

It is preferred not to change the group-selector for the audio-embedders between presets.

When changing a single Audio Group Selector, it will force a full reset of the audio-fifos at all the embedders. This is to maintain audio phase alignment over multiple audio groups. (an audio glitch in the embedded domain as result).

If the Card uses a static/fixed amount of embedded audio groups, then the user needs to check the group selectors of inactive/unused embedded audio groups in the different main presets to be sure that they are set correctly (or not changing) to avoid unwanted audio clicks or plops when switching presets.

Audio-De-Embedding:

The setting **Audio-Phase** should be set to **Align** (default).

The **Align** function will maintain audio phase alignment over multiple embedded groups when switching SDI video sources. Use the **Off** function only if you have serious problems with audio and switching SDI video sources which are not fully SMPTE complaint. When set to **Off** the audio phase-alignment cannot be guaranteed.

Appendix 2: Quad speed bus explained

The internal audio ADD-ON bus needed an upgrade for some applications. We wanted more channels (32 per video stream seem possible in the near future). And we want the bus to be bidirectional, so 32 channels in and 32 channels out at the same time.

The new interface needed to be compatible with all existing hardware (frames) and in the implementation of the master card it sometimes needed to be backward compatible with the original ADD-ON bus.

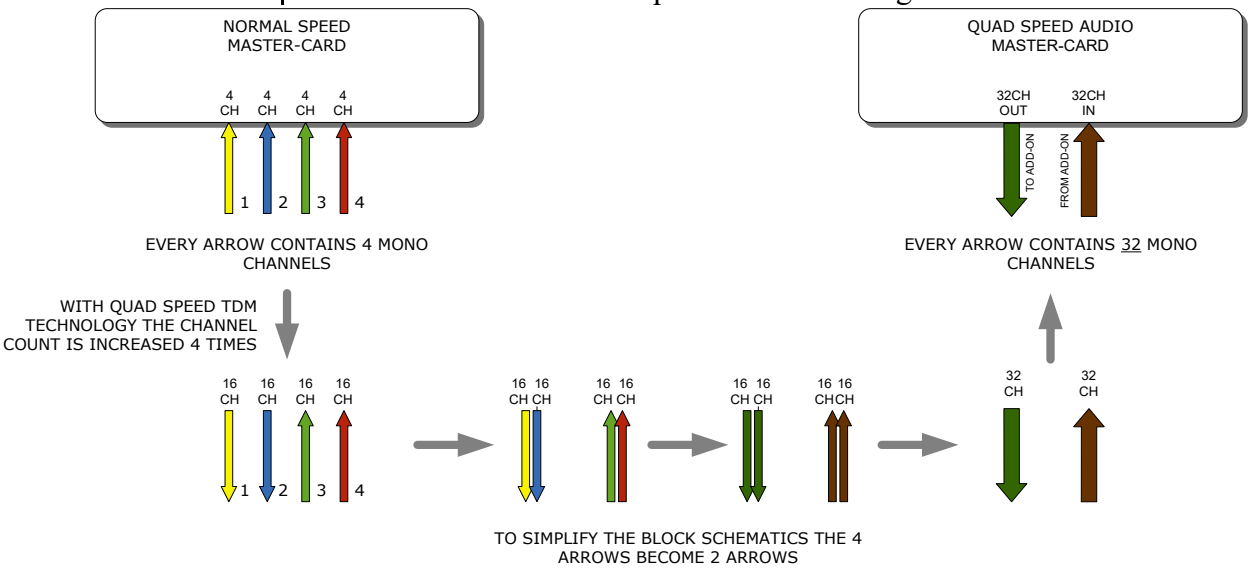

So the MASTER-CARD is now firmware enhanced to run 32 channels in either direction (64 channels total) instead of 16 channels in one direction

Some MASTER-CARD's will have two modes and some MASTER-CARD's will only have the Quad Speed mode [where the logical ADD-ON cards are only available in Quad Speed mode:

Dual mode MASTER-CARD's have a menu item to select the appropriate mode are. If a mode is selected all ADD-ON cards to that Master need to be in the same mode.

The following features and rules will apply:

- Up to 32 channels output from the master card with looping to up to 3 ADD-ON cards
  - The ADD-ON card just picks the channels it wants to process
  - Some ADD-ON cards will have the possibility to re-inject processed audio onto the next ADD-ON card
- Up to 32 channels input on the master card
  - If the master card can handle less than 32 channels, the lowest channel numbers will be used, as the ADD-ON card will always generate 32 channels (where some channels can be empty or silent)
- Channel shuffling is done in the ADD-ON card
  - The Master Card has only one setting to enable the quad speed audio bus

- Every Quad-Speed ADD-ON card takes 32 channels from the 'right hand ADD-ON card' and adds (or overwrites) the local processed channels.
  - This can be done for any of the channels that are processed in the ADD-ON card
- Some Master Cards are switchable between normal and quad-speed bus
- Channel designations on the block schematics:
  - Channel 1-32 (or less) are injected into the dark green large arrow from Master Card to ADD-ON card and looped on to the next ADD-ON card via the dark green arrow
  - The ADD-ON card injects up to 32 channels into the brown large arrow
  - An ADD-ON card will also actively loop extra processed channels into the next ADD-ON card, and finally into the Master Card
- The cross looping of the original design is now a straight loop
- The quad speed bus can also work in one direction
  - You can use a Quad Speed audio bus to de-embed audio from the master and present on the ADD-ON card as AES/EBU, Bitstream (like Dolby) or analog audio
  - If applicable the ADD-ON card can also be used as in injection point of physical audio streams

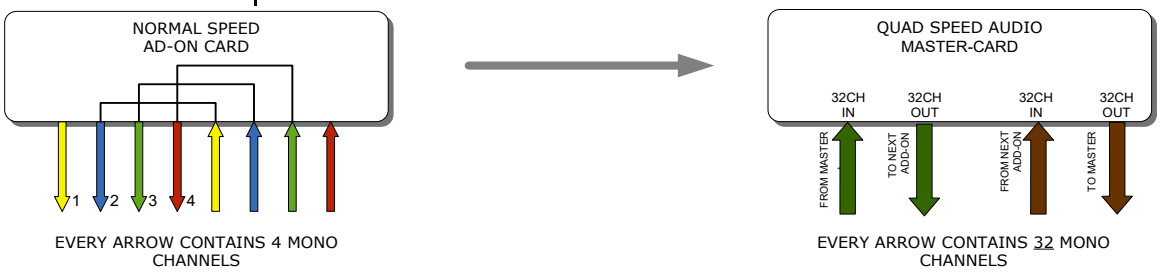

The ADD-ON cards also provide a looping function from one ADD-ON to the next ADD-ON card. This is however a more intelligent looping with optional re-insertion and multiplexing of signals.

Cascading of Quad Speed cards works identical to normal add-on cards. Every connection in the example below transports 16 mono audio channels (= 32 channels per color). It shows the inter slot connections 'in quad Speed mode' as part of the frame bus PCB.

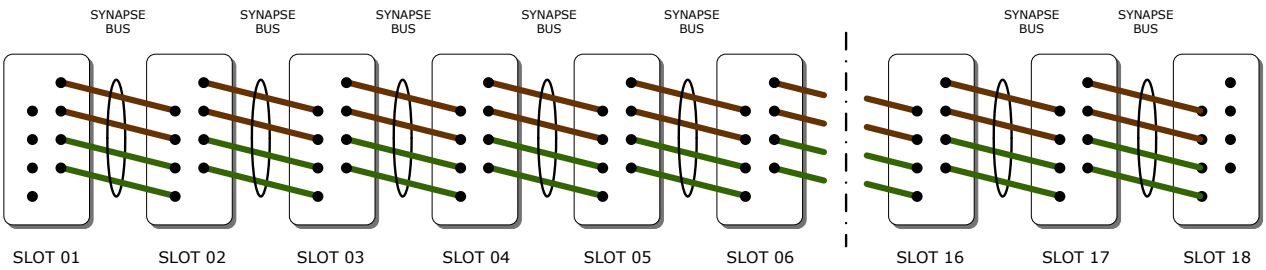

The system makes use of the same passive copper traces on the internal bus PCB as normal add-on bus cards.

The maximum amount of ADD-ON cards in Quad Speed mode is 3. These 3 ADD-ON cards will run all on the same clock in the same phase as the MASTER-CARD. This guarantees that audio channels that are processed in different ADD-ON cards will still operate in the same phase, something very important when processing multiple discrete surround channels.

You can mix normal speed Master-Cards with Quad Speed MASTER-Cards in one frame as the MASTER-CARD breaks the connection to the left hand card. All cards to the right of the master must be in the same mode as the master.

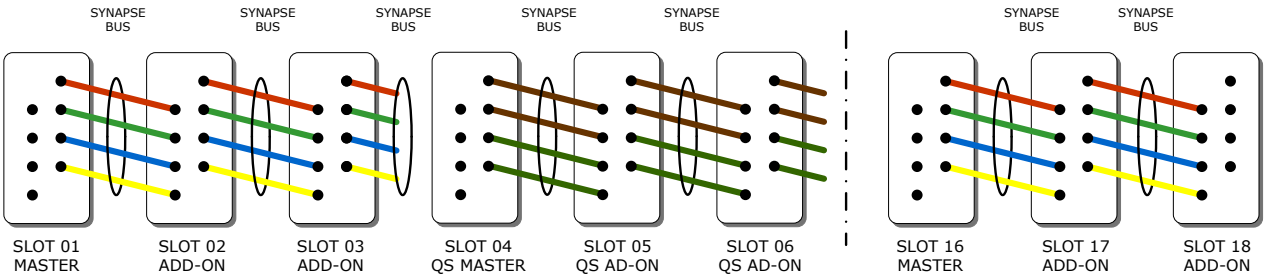

Mixing normal ADD-ON with Quad Speed ADD-ON combo's in one frame is allowed

Some examples

This is an Example where we combine a MASTER-CARD that performs embedded domain Dolby E to Dolby Digital Plus encoding. Between the E-decoding and Dolby Digital Plus encoding we want to watermark the left, right and center channel of the decoded discrete 5.1 surround channels and watermark a PCM channel used as a voice over for audio description.

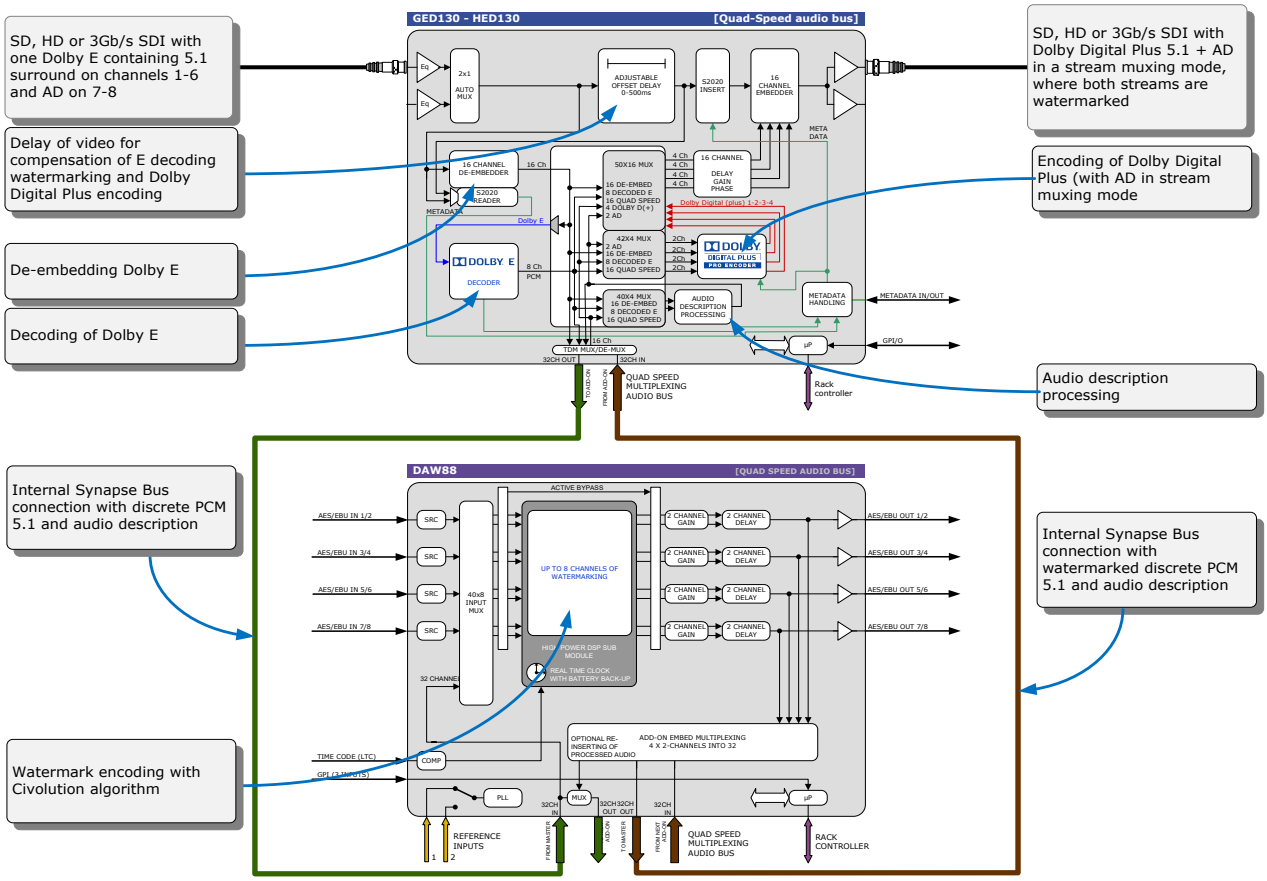

Embedded domain Dolby E to Dolby Digital Plus with Watermarking. The only connection to the outside world are two BNC cables.

Another example of the Quad-Speed audio ADD-ON bus shows a transmission application where a dual up/down/cross output card is connected to a DIO88 in a setup where the embedded audio combined with external audio and a convenient PCM monitoring is available.

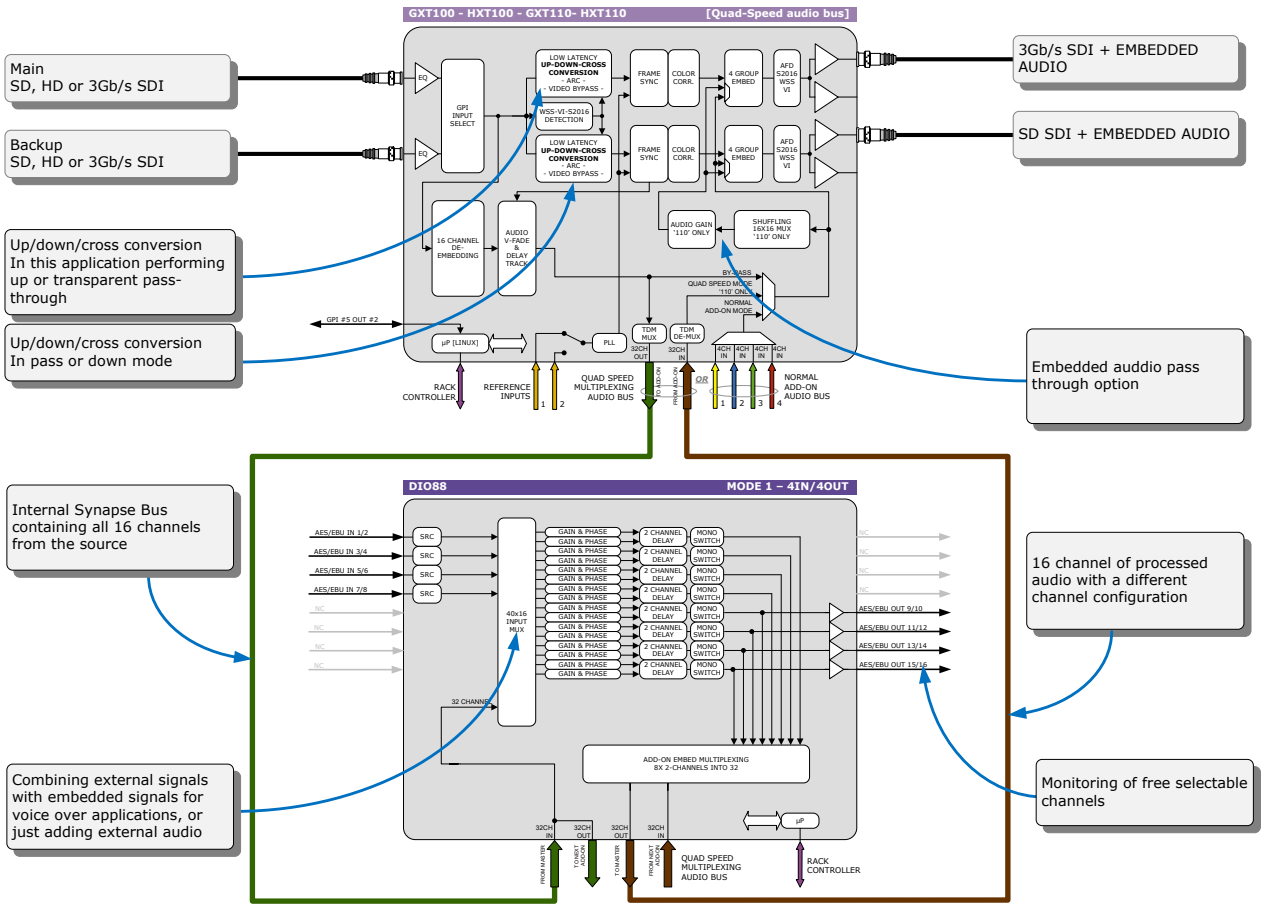

In the following example (next page) you will see a 4 card application that performs a massive amount of processing divided over 1 MASTER-CARD and 3 ADD-ON cards. This is a typical 'ingest' configuration and is used where the infrastructure does not use Dolby E (two in this example) but PCM+s2020. The input is a SD, HD or 3Gb/s SDI containing 2 Dolby E streams and 8 mono PCM streams. The output is the same SDI stream but with a selection of 16 channels selected out 8 original PCM channels and 16 PCM channels that are decoded from the Dolby E streams. The combo performs the following processing:

- De-embedding of 8x PCM and 2x Dolby E
- Decoding of two independent Dolby E streams
- Loudness processing of up to 16 channels sourced by any of the 8x PCM or decoded Dolby E streams
- Upmixing of a 2.0 to 5.1 if a Dolby E stream is not available
- Physical monitoring of all processed PCM streams
- Preset based shuffling of all source channels into 16 channels with the appropriate offset delays
- S2020 metadata insertion sourced from the E decoders, embedded s2020, generated presets or an external feed
- Video delay to compensate for audio propagation delay
- Embedding of up to 16 channels

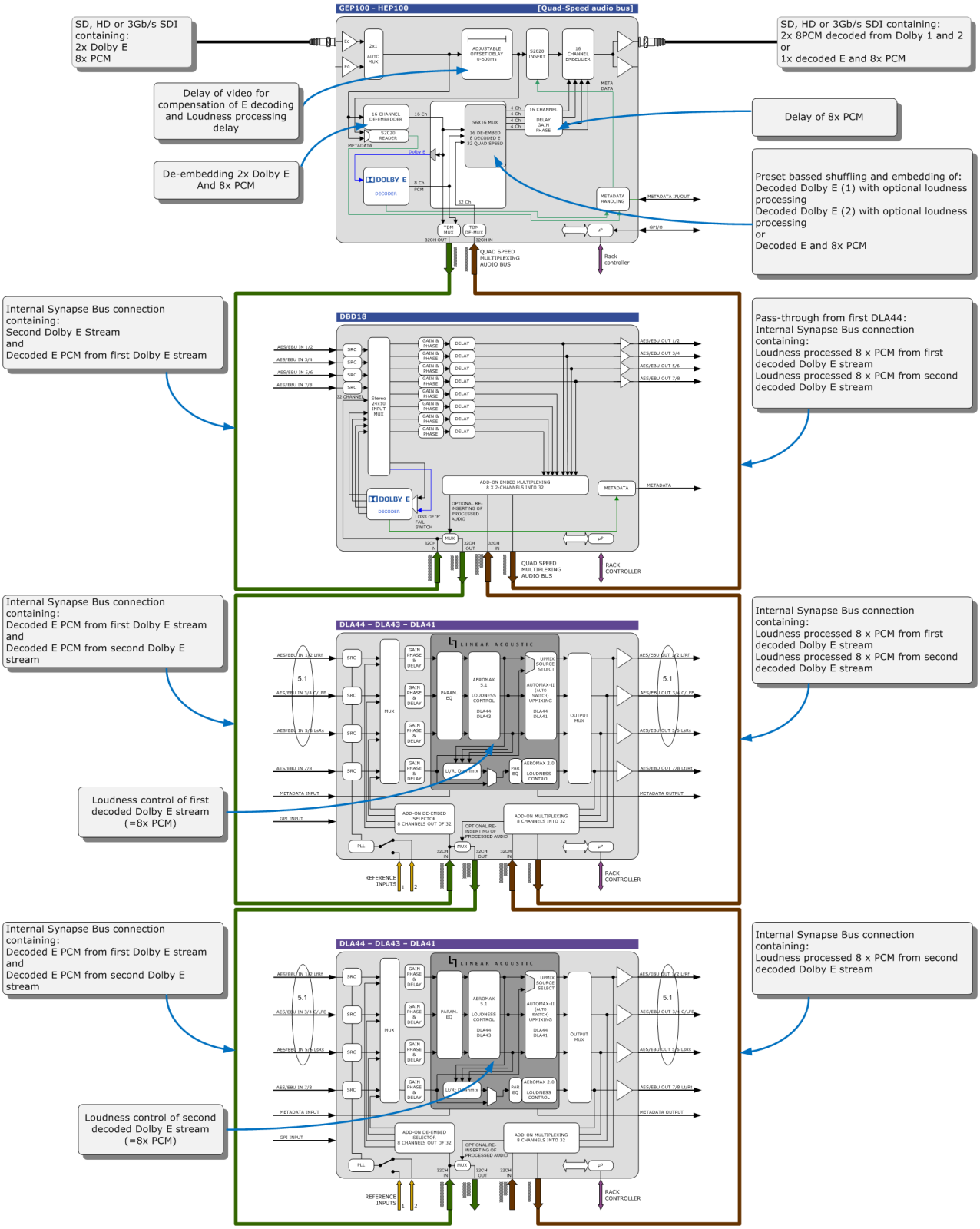
GEP100 - HEP100
[Quad-Speed audio bus]
SD, HD or 3Gb/s SDI containing:
2x Dolby E
8x PCM
Delay of video for compensation of E decoding and Loudness processing delay
De-embedding 2x Dolby E And 8x PCM
SD, HD or 3Gb/s SDI containing:
2x 8PCM decoded from Dolby 1 and 2
or
1x decoded E and 8x PCM
Delay of 8x PCM
Preset bassed shuffling and embedding of:
Decoded Dolby E (1) with optional loudness processing
Decoded Dolby E (2) with optional loudness processing
or
Decoded E and 8x PCM
QUAD SPEED MULTIPLEXING AUDIO BUS
Rack controller
Internal Synapse Bus connection containing:
Second Dolby E Stream
and
Decoded E PCM from first Dolby E stream
DBD18
Pass-through from first DLA44:
Internal Synapse Bus connection containing:
Loudness processed 8 x PCM from first decoded Dolby E stream
Loudness processed 8 x PCM from second decoded Dolby E stream
Internal Synapse Bus connection containing:
Decoded E PCM from first Dolby E stream
and
Decoded E PCM from second Dolby E stream
DLA44 – DLA43 – DLA41
Internal Synapse Bus connection containing:
Loudness processed 8 x PCM from first decoded Dolby E stream
Loudness processed 8 x PCM from second decoded Dolby E stream
Loudness control of first decoded Dolby E stream (=8x PCM)
Internal Synapse Bus connection containing:
Decoded E PCM from first Dolby E stream
and
Decoded E PCM from second Dolby E stream
DLA44 – DLA43 – DLA41
Internal Synapse Bus connection containing:
Loudness processed 8 x PCM from second decoded Dolby E stream
Loudness control of second decoded Dolby E stream (=8x PCM)
RACK CONTROLLER

This product contains open-source software

This product contains open-source software licensed under the GNU Public License (GPL). A copy of the GNU Public License is included below. Under this license you are eligible to receive a copy of the source code of this software including any changes.

EVS Broadcast Equipment shall provide the source code on request either through physical distribution or electronic communication. For physical distribution you may be charged a fee that covers distribution costs. This offer is valid up to three years after date of purchase. Please direct your request to the support department of EVS Broadcast Equipment.

EVS Broadcast Equipment supports open-source software by participating in the development of open-source projects or submitting improvements to these projects. For more information see ftp://opensource.axon.tv.

GNU Public License version 2

TERMS AND CONDITIONS FOR COPYING, DISTRIBUTION AND MODIFICATION

0. This License applies to any program or other work which contains a notice placed by the copyright holder saying it may be distributed under the terms of this General Public License. The “Program”, below, refers to any such program or work, and a “work based on the Program” means either the Program or any derivative work under copyright law: that is to say, a work containing the Program or a portion of it, either verbatim or with modifi cations and/or translated into another language. (Hereinafter, translation is included without limitation in the term “modifi cation”.) Each licensee is addressed as “you”.

Activities other than copying, distribution and modifi cation are not covered by this License; they are outside its scope. The act of running the Program is not restricted, and the output from the Program is covered only if its contents constitute a work based on the Program (independent of having been made by running the Program). Whether that is true depends on what the Program does.

1. You may copy and distribute verbatim copies of the Program’s source code as you receive it, in any medium, provided that you conspicuously and appropriately publish on each copy an appropriate copyright notice and disclaimer of warranty; keep intact all the notices that refer to this License and to the absence of any warranty; and give any other recipients of the Program a copy of this License along with the Program.

You may charge a fee for the physical act of transferring a copy, and you may at your option offer warranty protection in exchange for a fee.

2. You may modify your copy or copies of the Program or any portion of it, thus forming a work based on the Program, and copy and distribute such modifications or work under the terms of Section 1 above, provided that you also meet all of these conditions:

a) You must cause the modified files to carry prominent notices stating that you changed the fi les and the date of any change.
b) You must cause any work that you distribute or publish, that in whole or in part contains or is derived from the Program or any part thereof, to be licensed as a whole at no charge to all third parties under the terms of this License.
c) If the modified program normally reads commands interactively when run, you must cause it, when started running for such interactive use in the most ordinary way, to print or display an announcement including an appropriate copyright notice and a notice that there is no warranty (or else, saying that you provide a warranty) and that users may redistribute the program under these conditions, and telling the user how to view a copy of this License. (Exception: if the Program itself is interactive but does not normally print such an announcement, your work based on the Program is not required to print an announcement.)

These requirements apply to the modified work as a whole. If identifiable sections of that work are not derived from the Program, and can be reasonably considered independent and separate works in themselves, then this License, and its terms, do not apply to those sections when you distribute them as separate works. But when you distribute the same sections as part of a whole which is a work based on the Program, the distribution of the whole must be on the terms of this License, whose permissions for other licensees extend to the entire whole, and thus to each and every part regardless of who wrote it.

Thus, it is not the intent of this section to claim rights or contest your rights to work written entirely by you; rather, the intent is to exercise the right to control the distribution of derivative or collective works based on the Program.

In addition, mere aggregation of another work not based on the Program with the Program (or with a work based on the Program) on a volume of a storage or distribution medium does not bring the other work under the scope of this License.

3. You may copy and distribute the Program (or a work based on it, under Section 2) in object code or executable form under the terms of Sections 1 and 2 above provided that you also do one of the following:

a) Accompany it with the complete corresponding machine-readable source code, which must be distributed under the terms of Sections 1 and 2 above on a medium customarily used for software interchange; or,

b) Accompany it with a written offer, valid for at least three years, to give any third party, for a charge no more than your cost of physically performing source distribution, a complete machine-readable copy of the corresponding source code, to be distributed under the terms of Sections 1 and 2 above on a medium customarily used for software interchange; or,

c) Accompany it with the information you received as to the offer to distribute corresponding source code. (This alternative is allowed only for noncommercial distribution and only if you received the program in objects code or executable form with such an offer, in accord with Subsection b above.)

The source code for a work means the preferred form of the work for making modifi cations to it. For an executable work, complete source code means all the source code for all modules it contains, plus any associated interface defi nition fi les, plus the scripts used to control compilation and installation of the executable. However, as a special exception, the source code distributed need not include anything that is normally distributed (in either source or binary form) with the major components (compiler, kernel, and so on) of the operating system on which the executable runs, unless that component itself accompanies the executable.

If distribution of executable or object code is made by offering access to copy from a designated place, then offering equivalent access to copy the source code from the same place counts as distribution of the source code, even though third parties are not compelled to copy the source along with the object code.

4. You may not copy, modify, sublicense, or distribute the Program except as expressly provided under this License. Any attempt otherwise to copy, modify, sublicense or distribute the Program is void, and will automatically terminate your rights under this License. However, parties who have received copies, or rights, from you under this License will not have their licenses terminated so long as such parties remain in full compliance.

5. You are not required to accept this License, since you have not signed it. However, nothing else grants you permission to modify or distribute the Program or its derivative works. These actions are prohibited by law if you do not accept this License. Therefore, by modifying or distributing the Program (or any work based on the Program), you indicate your acceptance of this License to do so, and all its terms and conditions for copying, distributing or modifying the Program or works based on it.

6. Each time you redistribute the Program (or any work based on the Program), the recipient automatically receives a license from the original licensor to copy, distribute or modify the Program subject to these terms and conditions. You may not impose any further restrictions on the recipients' exercise of the rights granted herein. You are not responsible for enforcing compliance by third parties to this License.

7. If, as a consequence of a court judgment or allegation of patent infringement or for any other reason (not limited to patent issues), conditions are imposed on you (whether by court order, agreement or otherwise) that contradict the conditions of this License, they do not excuse you from the conditions of this License. If you cannot distribute so as to satisfy simultaneously your obligations under this License and any other pertinent obligations, then as a consequence you may not distribute the Program at all. For example, if a patent license would not permit royalty-free redistribution of the Program by all those who receive copies directly or indirectly through you, then the only way you could satisfy both it and this License would be to refrain entirely from distribution of the Program.

If any portion of this section is held invalid or unenforceable under any particular circumstance, the balance of the section is intended to apply and the section as a whole is intended to apply in other circumstances.

It is not the purpose of this section to induce you to infringe any patents or other property right claims or to contest validity of any such claims; this section has the sole purpose of protecting the integrity of the free software distribution system, which is implemented by public license practices. Many people have made generous contributions to the wide range of software distributed through that system in reliance on consistent application of that system; it is up to the author/donor to decide if he or she is willing to distribute software through any other system and a licensee cannot impose that choice.

This section is intended to make thoroughly clear what is believed to be a consequence of the rest of this License.

8. If the distribution and/or use of the Program is restricted in certain countries either by patents or by copyrighted interfaces, the original copyright holder who places the Program under this License may add an explicit geographical distribution limitation excluding those countries, so that distribution is permitted only in or among countries not thus excluded. In such case, this License incorporates the limitation as if written in the body of this License.

9. The Free Software Foundation may publish revised and/or new versions of the General Public License from time to time. Such new versions will be similar in spirit to the present version, but may differ in detail to address new problems or concerns.

Each version is given a distinguishing version number. If the Program specifies a version number of this License which applies to it and "any later version", you have the option of following the terms and conditions either of that version or of any later version published by the Free Software Foundation. If the Program does not specify a version number of this License, you may choose any version ever published by the Free Software Foundation.

10. If you wish to incorporate parts of the Program into other free programs whose distribution conditions are different, write to the author to ask for permission. For software which is copyrighted by the Free Software Foundation, write to the Free Software Foundation; we sometimes make exceptions for this. Our decision will be guided by the two goals of preserving the free status of all derivatives of our free software and of promoting the sharing and reuse of software generally.

NO WARRANTY

11. BECAUSE THE PROGRAM IS LICENSED FREE OF CHARGE, THERE IS NO WARRANTY FOR THE PROGRAM, TO THE EXTENT PERMITTED BY APPLICABLE LAW. EXCEPT WHEN OTHERWISE STATED IN WRITING THE COPYRIGHT HOLDERS AND/OR OTHER PARTIES PROVIDE THE PROGRAM "AS IS" WITHOUT WARRANTY OF ANY KIND, EITHER EXPRESSED OR IMPLIED, INCLUDING, BUT NOT LIMITED TO, THE IMPLIED WARRANTIES OF MERCHANTABILITY AND FITNESS FOR A PARTICULAR PURPOSE. THE ENTIRE RISK AS TO THE QUALITY AND PERFORMANCE OF THE PROGRAM IS WITH YOU. SHOULD THE PROGRAM PROVE DEFECTIVE, YOU ASSUME THE COST OF ALL NECESSARY SERVICING, REPAIR OR CORRECTION.

12. IN NO EVENT UNLESS REQUIRED BY APPLICABLE LAW OR AGREED TO IN WRITING WILL ANY COPYRIGHT HOLDER, OR ANY OTHER PARTY WHO MAY MODIFY AND/OR REDISTRIBUTE THE PROGRAM AS PERMITTED ABOVE, BE LIABLE TO YOU FOR DAMAGES, INCLUDING ANY GENERAL, SPECIAL, INCIDENTAL OR CONSEQUENTIAL DAMAGES ARISING OUT OF THE USE OR INABILITY TO USE THE PROGRAM (INCLUDING BUT NOT LIMITED TO LOSS OF DATA OR DATA BEING RENDERED INACCURATE OR LOSSES SUSTAINED BY YOU OR THIRD PARTIES OR A FAILURE OF THE PROGRAM TO OPERATE WITH ANY OTHER PROGRAMS), EVEN IF SUCH HOLDER OR OTHER PARTY HAS BEEN ADVISED OF THE POSSIBILITY OF SUCH DAMAGES.

Corporate
+32 4 361 7000

North & Latin America
+1 973 575 7811

Asia & Pacific
+852 2914 2501

Other regional offices
www.evs.com/contact

EVS Headquarters
Liège Science Park
13, rue Bois St Jean
B-4102 Seraing
Belgium

To learn more about EVS go to **www.evs.com**