INSTALLATION & CONFIGURATION MANUAL

GFS010 – HFS010 – SFS010

3GB/S, HD AND SD BASIC FRAME SYNCHRONIZER

SYNAPSE

Copyright

Disclaimer

The information in this manual is furnished for informational use only and subject to change without notice. While every effort has been made to ensure that the information contained in this user manual is accurate, up-to-date and reliable, EVS Broadcast Equipment cannot be held responsible for inaccuracies or errors that may appear in this publication.

Improvement Requests

Your comments will help us improve the quality of the user documentation. Do not hesitate to send improvement requests, or report any error or inaccuracy on this user manual by e-mail to doc@evs.com.

Regional Contacts

The address and phone number of the EVS headquarters are usually mentioned in the **Help > About** menu in the user interface.

You will find the full list of addresses and phone numbers of local offices either at the end of this user manual (for manuals on hardware products) or on the EVS website on the following page: http://www.evs.com/contacts.

User Manuals on EVS Website

The latest version of Media Infrastructure manuals are available at: https://mi-sftp.evs.com/
The user manuals for other EVS products can be found at the EVS download center, on the following webpage: https://www.evs.com/en/download-area.

WARNING: TO REDUCE THE RISK OF FIRE OR ELECTRICAL SHOCK, DO NOT EXPOSE THIS APPLIANCE TO RAIN OR MOISTURE

● ALWAYS disconnect your entire system from the AC mains before cleaning any component. The product frame (SFR18 or SFR04) must be terminated with three-conductor AC mains power cord that includes an earth ground connection. To prevent shock hazard, all three connections must always be used.
● NEVER use flammable or combustible chemicals for cleaning components.
● NEVER operate this product if any cover is removed.
● NEVER wet the inside of this product with any liquid.
● NEVER pour or spill liquids directly onto this unit.
● NEVER block airflow through ventilation slots.
● NEVER bypass any fuse.
● NEVER replace any fuse with a value or type other than those specified.
● NEVER attempt to repair this product. If a problem occurs, contact your local EVS distributor.
● NEVER expose this product to extremely high or low temperatures.
● NEVER operate this product in an explosive atmosphere.

Warranty: EVS warrants their products according to the warranty policy as described in the general terms. That means that EVS Broadcast Equipment SA can only warrant the products as long as the serial numbers are not removed.

Date created: 19-11-2009
Date last revised: 19-04-2013

This product complies with the requirements of the product family standards for audio, video, audio-visual entertainment lighting control apparatus for professional use as mentioned below.

CE	EN60950	Safety
	EN55103-1: 1996	Emission
	EN55103-2: 1996	Immunity

EVS Broadcast Equipment GFS010 / HFS010 / SFS010 FC Tested To Comply With FCC Standards FOR HOME OR OFFICE USE	This device complies with part 15 of the FCC Rules Operation is subject to the following two conditions: (1) This device may cause harmful interference, and (2) This device must accept any interference received, including interference that may cause undesired operation.

Table of Contents

1 Introduction to Synapse

An Introduction to Synapse

Synapse is a modular system designed for the broadcast industry. High density, intuitive operation and high quality processing are key features of this system. Synapse offers a full range of converters and processing modules. Please visit the EVS Broadcast Equipment SA Website at http://www.evs.com to obtain the latest information on our new products and updates.

Local Control Panel

The local control panel gives access to all adjustable parameters and provides status information for any of the cards in the Synapse frame, including the Synapse rack controller. The local control panel is also used to back-up and restore card settings. Please refer to the RRC18, RRC10, RRC04, RRS18 and RRS04 manuals for a detailed description of the local control panel, the way to set-up remote control over IP and for frame related settings and status information.

Remote Control Capabilities

The remote control options are explained in the rack controller (RRC18/RRC10/RRC04/RRS18/RRS04) manual. The method of connection to a computer using Ethernet is described in the RRC/RRS manual.

! **CHECK-OUT:** "SYNAPSE CORTEX" SOFTWARE WILL INCREASE SYSTEM FLEXIBILITY OF ONE OR MORE SYNAPSE FRAMES

Although not required to use Cortex with a Synapse frame, you are strongly advised to use a remote personal computer or laptop PC with Synapse Cortex installed, as this increases the ease of use and understanding of the modules.

2 Unpacking and Placement

Unpacking

The EVS Synapse card must be unpacked in an anti-static environment. Care must be taken NOT to touch components on the card – always handle the card carefully by the edges. The card must be stored and shipped in anti-static packaging. Ensuring that these precautions are followed will prevent premature failure from components mounted on the board.

Placing the card

The Synapse card can be placed vertically in an SFR18 frame or horizontally in an SFR04 and SFR08 frame. Locate the two guide slots to be used, slide in the mounted circuit board, and push it firmly to locate the connectors.

Correct insertion of card is essential as a card that is not located properly may show valid indicators, but does not function correctly.

NOTE: On power up all LED's will light for a few seconds, this is the time it takes to initialise the card.

NOTE: Please check appendix 1 before connecting any backpanel!

3 A Quick Start

When Powering-up

On powering up the Synapse frame, the card set will use basic data and default initialisation settings. All LED's will light during this process. After initialisation, several LED's will remain lit – the exact number and configuration is dependant upon the number of inputs connected and the status of the inputs.

Changing settings and parameters

The front panel controls or the Synapse Cortex can be used to change settings. An overview of the settings can be found in chapter 5, 6 and 7 of this manual.

Front Panel Control

Front Panel Display and Cursor

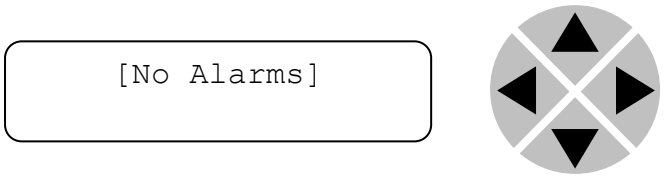

Settings are displayed and changed as follows;

Use the cursor 'arrows' on the front panel to select the menu and parameter to be displayed and/or changed.

Press ►	To go forward through the menu structure.
Press ◄	To go back through the menu structure.
Press ▲	To move up within a menu or increase the value of a parameter.
Press ▼	To move down through a menu or decrease the value of a parameter.

NOTE: Whilst editing a setting, pressing ► twice will reset the value to its default.

Example of changing parameters using front panel control

With the display as shown below

```
RRC18 [Select Card]
>S01=SFS10
```

Pressing the ► selects the SFS10 in frame slot 01.

The display changes to indicate that the SFS10 has been selected. In this example the `Settings` menu item is indicated.

```
SFS10 [Select Menu]
>Settings
```

Pressing the ► selects the menu item shown, in this example `Settings`.

(Pressing ▲ or ▼ will change to a different menu eg `Status, Events)`.

The display changes to indicate that the SFS10 `Settings` menu item `SDI-Format` has been selected and shows that it current setting is `Auto`.

```
SFS10 [Settings]
>SDI-Format=Auto
```

Pressing the ► selects the settings item shown, in this example `SDI-Format.`

(Pressing ▲ or ▼ will change to a different setting, eg `Mode, H-Delay)`.
The display changes to indicate that the SFS10 `Edit Setting` menu item `SDI-Format` has been selected.

```
SFS10 Edit Setting]
SDI-Format>Auto
```

To edit the setting of the menu item press ▲ or ▼.

All menu items can be monitored and/or changed in this way. Changing a setting has an immediate effect.

Synapse Cortex Software

Synapse Cortex can be used to change the settings of Synapse modules from a PC, either locally or remotely. The software enables communication based on TCP/IP between the Setup PC and Synapse frames/modules.

Each Synapse frame is addressed through its rack controller's unique IP address, giving access to each module, its menus and adjustment items. Synapse Cortex has access to data contained within the Synapse module and displays it on a GUI. The software has an intuitive structure following that of the module that it is controlling.

For operation of Synapse Cortex, please refer to the Cortex manual.

Menu Structure Example

Slot	Module		Item		Parameter		Setting
▲							
▲							
S02			Identity				
▲			▲				
S01	SFS10	▶	Set-tings	▶	Standard_dig	▶	Auto
▼			▼		▼		▼
S00	RRC18		Status		Mode		625
			▼		▼		▼
			Events		Ref-Input		525
					▼		
					H-Delay		
					▼		
					▼		

NOTE: Further information about Front Panel Control and Synapse Cortex can be obtained from the RRC and RRS operational manuals and the Cortex help files.

4 The GFS-HFS-SFS010 Card

Introduction

The GFS010, HFS010 and SFS010 are frame synchronizers with 16 channel audio transparency and color correcting capabilities.

The GFS010 is compatible with 270Mb/s, 1.5Gb/s and 3Gb/s for full 1080p/50 or 1080p/59.94 use. The HFS010 is compatible with SD-SDI (270Mb/s) and HD-SDI (1.5Gb/s) and can be future upgraded to 3Gb/s compatibility. The SFS010 is limited to 270Mb/s only but can also be upgraded to HD or even 3Gb/s.

Features

- 1 SDI input
- Compatible with the following input formats (auto selecting) (1080p only for GFS010):
  - 1080p/59.94
  - 1080p/50
  - 1080i/59.94
  - 1080i/50
  - 1080p/29.97
  - 1080p25
  - 1080p24
  - 720p/59.94
  - 720p50
  - SD525
  - SD625

- Color corrector
- Transparent for 16 channels of embedded audio
- Video proc-amp (Y and C control)
- Hue control for NTSC inputs
- Locks to a Bi-Level or a Tri-level sync, or to an SDI input.
- Full control and status monitoring through the front panel of the SFR04/SFR08/SFR18 frame and the Ethernet port (ACP)
- Frame sync with output phase control in Lines and pixels with respect to reference

NOTE: The frame synchronizer works at best if the inputs are switched according the SMPTE guidelines described in RP168. This ensures that not only the picture but also the ancillary data remains correct. The frame synchronizer however can handle complete asynchronous switching at the input.
To ensure correct operation the F-delay of the card needs to be 1 or higher so there is enough time to mask the error.

Applications

- Transmission output frame synchronizer with backup input.
- General purpose post router autophaser.

Block schematic

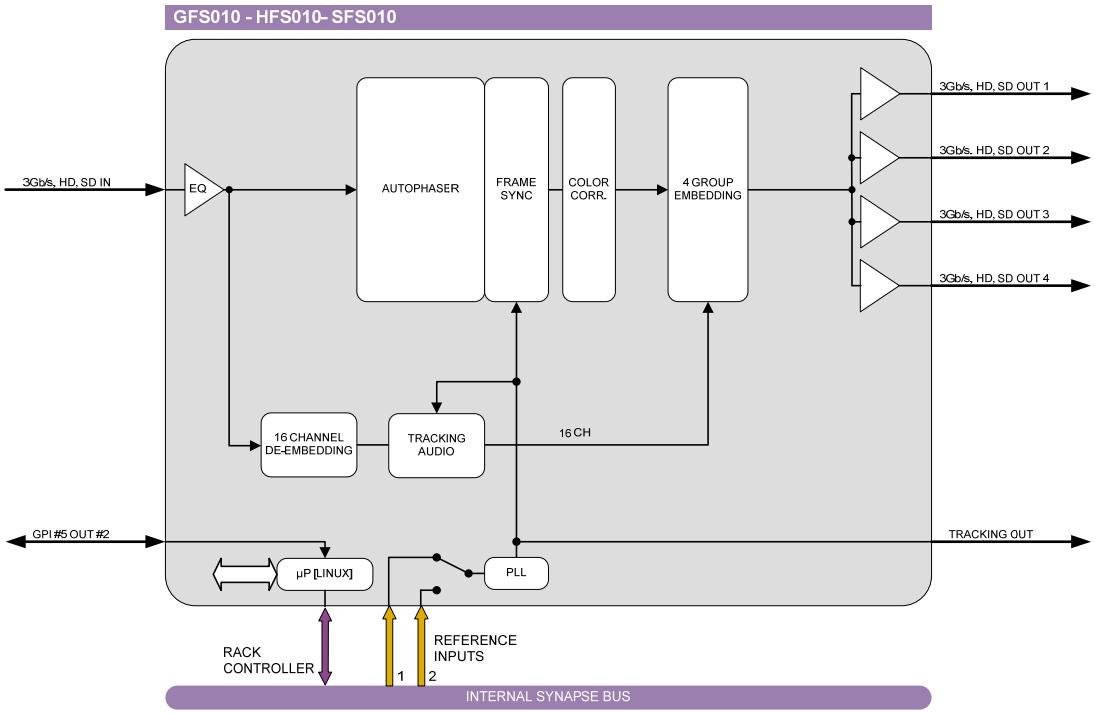

5 Settings Menu

Introduction

The settings menu displays the current state of each GFS/HFS/SFS010 setting and allows you to change or adjust it. Settings can be changed using the front panel of the Synapse frame (SFR18, SFR08 or SFR04) or with Cortex. Also the SCP08 control can be used. Please refer to chapter 3 for information on the Synapse front panel control and Cortex.

Note: All items preceded with a #-sign are part of the presets.

SYSTEM SETTINGS

IO-Ctrl

This card has separate presets for the input and output settings under the 'SYSTEM SETTINGS' header. With this item you select how the IO presets are controlled: Manually (manual) or via GPI-triggers (GPI, GPI-A, GPI-B or GPI-C). By default it is set to Manual.

IO_Prst_Act

With this item you can manually change the currently active IO settings. Can be any preset between 1 and 8. By default it is set to 1. All menu settings that are preceded with a '# '-prefix under the 'SYSTEM SETTINGS' header are part of the preset.

IO_Prst_Edit

Here you can select which of the 8 selectable IO settings presets you want to edit. Changing this will not change the active preset, unless the currently active preset is the same you are going to edit. All menu settings that are preceded with a '# '-prefix under the 'SYSTEM SETTINGS' header are part of the preset.

#Inp_SelA

With this item you can select which input you want to use. Can be SDI-1 (SDI input 1), a Zoneplate or a Colorbar as input. Can also be set to Off to switch off the output entirely. The default for this setting is SDI-1.

#Out-Frmt

With Out-Frmt you can set what the output should be. Possible settings are:

- 1080i60 (default), 1080i50 (HFS/GFS only)
- 1080p30, 1080p25, 1080p24 (HFS/GFS only)
- 720p60, 720p50 (HFS/GFS only)
- SD525, SD625
- 1080p50, 1080p60 (GFS only)

#IO-Map
(GFS only)

With this setting you can select the 3Gb/s mapping in case the input format is 1080p50 or 1080p60. Can be manually set to `Level A` or `Level B`. You can also choose to set it to `auto`, in which case the GDL will automatically detect whether the input is Level A or Level B.

#V-delay

`V-Delay` setting allows adjustment of the vertical phase of the output signal with respect to the selected reference input.

The `V-Delay` setting gives a delay in addition to the reference timing. For example: if the `V-Delay` is set to 10 TV HD lines, the output signal will be delayed by reference timing + 10 TV HD lines. The signal is delayed (advanced) with respect to the phase of the reference signal. The available range is from 0 to a maximum of 1125 lines (dependant on I/O format). The default setting is `0ln`. The preset master for this is `Out-Frmt`, hence the '#'-prefix.

#H-delay

The H-Delay setting allows adjustment of the Horizontal phase of the output signal with respect to the selected reference input.

The H-Delay setting gives a delay in addition to the reference timing. For example: if the H-Delay is set to 10 pixels, the output signal will be delayed by reference timing + 10 pixels. The signal is delayed (advanced) with respect to the phase of the reference signal. The available range is from 0 to a maximum of 5124 pixels (dependant on I/O format). The default setting is `0px`. The preset master for this is `Out-Frmt`, hence the '#'-prefix.

#Freeze_A

Freeze enables the capture of one Video Field or Frame (depending on the setting `Freeze_Mode`). The settings for `Freeze` are `On` or `Off`. The default is `Off`.

Delay-Status

It is possible to display (in the status menu `IODelayA` and `IODelayB`) the processing time of the card in the status menu. This setting allows you to switch this function `ON` or `OFF`. Default setting is `OFF`

Lock-Mode

`Lock-Mode` determines whether the card is locked to his `input` (input 1), to the reference (`Ref1` or `Ref2`) or `freerun` (not locked). By default it is set to `Ref1`. Can also be set to `RefAuto`.

When set to `RefAuto` the card chooses ref1 as its source. Whenever ref1 fails, it will switch to ref 2 (only for SFR08 and SFR18 frames and only when ref2 offers the same ref format as ref 1). When ref 1 is back up again, it will only automatically switch back to ref 1 when ref 2 fails.

Ref-Type

Sets the type of incoming reference. Can be either Bi-Level or `Tri-Level`. Default is `Bi-Level`.

P60-P50_Sync

With this setting you can choose to synchronize each `one frame` or each `two frames`. Default is `One Frame`. The two-frame-synchronize mode only works for 720p60, 720p50, 1080p50 and 1080p60 standards.

ANC_BlankA

With this setting you can Blank the vertical ancillary data only (`V-Only`), blank de horizontal ancillary data only (`H-only`) or blank both vertical an horizontal ancillary data (`H_And_V`). You can also choose to not blank any data (`Off`), which is also default.

Freeze_Mode

`Freez_Mode` allows you to choose between storing a complete Video `Frame` or `Field` (double written) in case of a video freeze. The default setting is Field

PrstEditView

With this setting set to `Follow Active`, the edit preset settings (like for instance `UP_Prst_editA` and `UP_Prst_editB`) will follow the active preset when the active preset is changed. This to avoid confusion when changing the active. Set to `Independent` the edit preset will not automatically follow active preset changes. By default set to `Follow Active`.

PatternSpeed

Sets the speed of the test-pattern (see settings `Inp_SelA` and `Inp_SelB`) animation between 0 (still) and 15 (fast). Default is 1.

Input_loss_A

`Input_loss_A` determines what the output of outputs A is in case of lost input:

- `Freeze:` a capture of the last good field or frame.
- `Colorbar:` a color bar
- `Zoneplate`: a zone plate
- `Black:` a black output.
- `Grey:` a grey output.
- `Green:` a green output.
- `Freeze 1 sec:` a freeze of the last field or frame for 1 second. After 1 second the output framework is disabled.
- `Freeze 5 sec:` Same as Freeze 1 sec, only holding the freeze frame/field for 5 seconds.

The default setting is `freeze`.

	INSERTER This card can insert several data values in the VBI of the outputs. With the following settings you can choose what you want to insert.
Timecode_Inp	With this card it is possible to copy the embedded timecode information of either input `SDI-1` or input `SDI-2` to the output. With this setting you select which input you want to use, or switch the timecode inserting `Off` (default).
VITC_Ln_In	With this setting you can select what line of the input you want to copy the VITC data from (only when input is SD). Can be any line between line 7 and line 22. Default is line 19.
VITC_Ln_Ctrl	Here you can choose whether you want to select the line, to where you want to copy the timecode data to, manually (`manual`) or use the information in the `ATC_DBB` package to select the lines (ATC_DBB package contains information about the line duplication as well). Default is `Manual`.
VITC_Ln_625	When `VITC_Ln_Ctrl` is set to `Manual`, with this setting you can select a line between 7 and 22 when the output is SD625. Default is line 19.
VITC_Ln_525	When `VITC_Ln_Ctrl` is set to `Manual`, with this setting you can select a line between 7 and 22 when the output is SD525. Default is line 10.
VITC_Ln_Dup	When set to `On`, the VITC line is duplicated to the above selected line + 2 lines.
Ins_CtrlA	With this item you select how the inserter presets are controlled: Manually (`manual`), via GPI-triggers (`GPI`, `GPI-A`, `GPI-B` or `GPI-C`), via changes of the SD Aspect Ratio (`SD_AR`) or the HD aspect ratio (`S2016`) (AFD)). Default is `Manual`.
Ins_Prst_ActA	With this item you can manually change the currently active preset when in transparent mode. Can be any preset between 1 and 16. By default it is set to 1. All menu settings that are preceded with a '`#Ins`'-prefix are part of the preset.

Ins_Prst_EditA

Here you can select which of the 16 selectable presets you want to edit when in a transparent mode. Changing this will not change the active preset, unless the currently active preset is the same you are going to edit. All menu settings that are preceded with a '`#Ins`'-prefix are part of the preset.

#VI-InsertA

You can turn VI insertion `on` or `off` for. Default is `Off`.

#VI-DataA

With the `#VI-InsertA` setting set to `on`, you can select VI values with this setting, which you want to be inserted. possible are all VI values between `4:3_0` and `4:3_7` and the settings between `16:9_0` and `16:9_7`. Default is `4:3_0`.

#WSS-InsertA

You can choose which type of WSS data you want to insert with this setting, or switch WSS insertion entirely `off` (default value). You can set it to `Standard` or `Extended`.

#WSS-StndA

With the `#WSS-InsertA` setting set to `Standard`, you can select WSS standard values with this setting, which you want to be inserted. possible are all WSS values between `1_vid` and `8_vid` and the settings between `1_flm` and `8_flm`. Default is `1_vid`.

#WSS-ExtndA

With the `#VI-InsertA` setting set to `on`, you can select VI values with this setting, which you want to be inserted. possible are all WSS values between `4:3_0` and `4:3_7` and the settings between `16:9_0` and `16:9_7`. Default is `4:3_0`.

#VI-DataA

With the `#WSS-InsertA` setting set to `extended`, you can select WSS extended values with this setting, which you want to be inserted. possible are all VI settings between `4:3_0` and `4:3_7` and the settings between `16:9_0` and `16:9_7`. Default is `4:3_0`.

#S2016-InsertA

You can turn S2016 (AFD) insertion `on` or `off`. Default is `Off`.

#S2016-DataA

With the `#S2016-InsertA` setting set to `on`, you can select AFD values with this setting, which you want to be inserted. possible are all AFD values between `AFD0` and `AFD15`.

#OSD-StyleA

With this setting you select how the on-screen display text should be displayed. Possible are:

- `Off` (no OSD)
- `Transp` (transparent text)
- `Masked` (OSD displayed in a black box)
- `Blink-Transp` (blinking transparent text)
- `Blink-Masked` (blinking text in a black box)

#OSD-TextA

Here you can set a 10 character long text which should be displayed on-screen when the above setting is not set to Off.

VIDEO PROC

GainA

With this setting you control the overall gain of the video between 50 and 150%. Default is 100%.

R-GainA

`R-GainA` controls the Red gain. The control range is between 50% and 150%. The default setting is 100%.

G-GainA

`G-GainA` controls the Green gain. The control range is between 50% and 150%. The default setting is 100%.

B-GainA

`B-GainA` controls the Blue gain. The control range is between 50% and 150%. The default setting is 100%.

BlackA

`BlackA` controls the total R-G-B Black gain. The range is between –128bit and 127bit. The default setting is 0bit.

R-BlackA

`R-BlackA` controls the Red-Black. The control range is between –128bits and 127 bits in steps of 1 bit. The default setting is 0 bit.

G-BlackA

`G-BlackA` controls the Green-Black. The control range is between –128bits and 127 bits in steps of 1 bit. The default setting is 0 bit.

B-BlackA

`B-BlackA` controls the Blue-Black. The control range is between –128bits and 127 bits in steps of 1 bit. The default setting is 0 bit.

CVBS-Hue

Here you can change the analog input hue between -90 and 90.

AUDIO PROC AMP

Audio-Phase

If this setting is set to `Align`, the card ensures audio-phase alignment between multiple audio channels and audio groups, which is necessary for multi-channel (surround) purposes. If errors in the signal-chain occur the de-embedder blocks reset synchronously to maintain audio-phase-alignment.

If this setting is set to `Off`, the card eats-all audio including errors. Even if there are DBN/ANC/ECC or channel-sequence errors, the de-embedder will pass them. Be aware that audio-phase-alignment between multiple audio channels and audio groups can not be maintained if this setting is set to `Off`.

Note: This setting can be helpful to solve problems in the field using equipment which doesn't follow the standards correctly.

AudioStatusBits

With this setting you select whether the audio status bits should be Transparent (`off`) (same status bit on the outputs as on the inputs) or to overwrite (`on`) them with new status bits.

emb_aud_hand_A

Embedded audio handling for channel A. This card has a built-in embedder, de-embedder and audio gain stage. This menu item controls the functionality of these stages.

- `Blank`: blanks the horizontal blanking.
- `Pass`: passes the audio un-processed.
- `Process`: controls the 'smart' audio handling.

'smart' audio handling: the selected groups in the following Grp-A-Sel and Grp-B-Sel setting item are de-embedded. The audio is routed through an audio gain stage and is re-embedded in the selected group afterwards. This is performed after the frame synchronizer. When a video (+embedded audio) frame needs to be rewritten or removed as a result of an asynchronous SD/HD/3Gb/s input, the audio gain stage ramps down the selected group prior to the action and ramps up afterwards. This whole process masks audio irregularities that are audible in a normal Frame synchronizer. When using the `Pass` setting DOLBY-E is transfered with minimum delay.

Audio_Ctrl

With this setting you select how the audio presets should be controlled. Can be either Manually (`Manual`), via GPI-triggers (`GPI`, `GPI-A`, `GPI-B` or `GPI-C`), via the SD aspect ratio (`SD-AR`) or via the HD aspect ratio (`S2016`).

Audio_Prst_act	With this item you can manually change the currently active audio preset. Can be any preset between 1 and 16. By default it is set to 1. All menu settings that are preceded with a '`#Emb`'-prefix are part of the preset.
Audio_Prst_Edit	Here you can select which of the 16 selectable audio presets you want to edit. Changing this will not change the active preset, unless the currently active preset is the same you are going to edit. All menu settings that are preceded with a '`#Emb`'-prefix are part of the preset.
	EMBEDDER
#Emb-AB-Mode	With Emb-AB-Mode you select how the audio in groups A and B should be embedded into the video: `overwrite` the exsisting audio, or `Append`. Default is `overwrite`.
#EmbA_Grp	With this setting you select in to which audio group (= 4 audio channels) of the outputs you want to embed the first 4 forwarded audio channels coming from the de-embedders. Can be `group1`, `group2`, `group3` or `group4`. You can also choose to not use these 4 audio channels for anything by setting this item to `off`. By default it is set to `Group1`.
#EmbA1_Inp ~ #EmbA4_Inp	With these settings you can select where the corresponding audio channels (channel A1 till channel A4) of the outputs are coming from. In this card you can only choose to get the audio from the de-embedder of the active input (`Demb-Input`), or to mute the corresponding channel (set to `off`). Defaults here are `Off`.
#EmbB_Grp	With this setting you select in to which audio group (= 4 audio channels) of the outputs you want to embed the second 4 forwarded audio channels coming from the de-embedders/add-on bus. Can be `group1`, `group2`, `group3` or `group4`. You can also choose to not use these 4 audio channels for anything by setting this item to `off`. By default it is set to `Group2`.
#EmbB1_Inp ~ #EmbB4_Inp	With these settings you can select where the corresponding audio channels (channel B1 till channel B4) of the outputs are coming from. In this card you can only choose to get the audio from the de-embedder of the active input (`Demb-Input`), or to mute the corresponding channel (set to `off`). Defaults here are `Off`.

#Emb-CD-Mode	With Emb-AB-Mode you select how the audio in groups C and D should be embedded into the video: `overwrite` the exsisting audio, or `Append`. Default is `overwrite`.
#EmbC_Grp	With this setting you select in to which audio group (= 4 audio channels) of the outputs you want to embed the third group of 4 forwarded audio channels coming from the de-embedders/add-on bus. Can be `group1`, `group2`, `group3` or `group4`. You can also choose to not use these 4 audio channels for anything by setting this item to `off`. By default it is set to `Group2`.
#EmbC1_Inp ~ #EmbC4_Inp	With these settings you can select where the corresponding audio channels (channel C1 till channel C4) of the outputs are coming from. In this card you can only choose to get the audio from the de-embedder of the active input (`Demb-Input`), or to mute the corresponding channel (set to `off`). Defaults here are `Off`.
#EmbD_Grp	With this setting you select in to which audio group (= 4 audio channels) of the outputs you want to embed the last 4 forwarded audio channels coming from the de-embedders/add-on bus. Can be `group1`, `group2`, `group3` or `group4`. You can also choose to not use these 4 audio channels for anything by setting this item to `off`. By default it is set to `Group2`.
#EmbD1_Inp ~ #EmbD4_Inp	With these settings you can select where the corresponding audio channels (channel D1 till channel D4) of the outputs are coming from. In this card you can only choose to get the audio from the de-embedder of the active input (`Demb-Input`), or to mute the corresponding channel (set to `off`). Defaults here are `Off`.
	GPI MODE
GPI-Ctrl	You can set the GPI to be triggered in a `latching` manner or in a `nonLatching` manner. Default for this is `Latch`.

GPI_1 ~ GPI_5

In this card it is possible to make the 5 available GPI triggers part of a GPI pool that can control the various functions in the card separately (all `Xx_Ctrl` items of the menu). With these items you can select which pool the corresponding GPI is part of and in what way it should trigger. You can also choose to not use the corresponding GPI at all by setting it to `Off`. Possible settings are:

- `GPI A`: part of GPI-A pool, triggered once Take A is closed.
- `GPI B`: part of GPI-B pool, triggered once Take B is closed.
- `Take A`: part of GPI-A pool, used to trigger GPI A.
- `Take B`: part of GPI-B pool, used to trigger GPI B.
- `GPI Prio A`: part of GPI-A pool, working in a priority manner (highest closed GPI of the pool is activated)
- `GPI Prio B`: : part of GPI-B pool, working in a priority manner (highest closed GPI of the pool is activated)
- `GPI Prio C`: part of GPI-C pool, working in a priority manner (highest closed GPI of the pool is activated)

Please refer to 'Appendix 2: GPI's explained' for a more elaborate explanation of the GPI settings.

NETWORK

IP_Conf0

With this setting you can let the card obtain an IP address automatically via `DHCP`, or appoint a `manual` set IP address. By default this setting is set to `Manual`.

mIP0

When `IP_Conf0` is set to `manual`, you can type in the preferred IP address here. By default it is set to 172.16.1.2

mNM0

With `IP_Conf0` set to `manual`, with this setting you can set a Netmask. Default is 255.255.0.0

mGW0

With `IP_Conf0` set to `manual`, this setting let you set a Standard Gateway. Default is set to 172.16.0.1

NetwPrefix0

Here you can set the proper network prefix if required.

6 Status Menu

Introduction

The status menu indicates the current status of each item listed below.

sInp1

This status item indicates the presence and format of a valid signal in input 1. This is displayed as:

- 1080P60
- 1080p50
- 1080i60
- 1080i50
- 1080p30
- 1080p25
- 1080p24
- 720p60
- 720p50
- SD525
- SD625
- NA

sInp1_VI

Displays the detected VI value found in input1. This is displayed as follows:

- 4:3_0
- 4:3_1
- 4:3_2
- 4:3_3
- 4:3_4
- 4:3_5
- 4:3_6
- 4:3_7
- 16:9_0
- 16:9_1
- 16:9_2
- 16:9_3
- 16:9_4
- 16:9_5
- 16:9_6
- 16:9_7
- NA (no VI detected)

sInp1_WSS-Stnd

This status item displays the detected standard WSS value of input 1. this is displayed as follows:

- 1_vid
- 2_vid
- 3_vid
- 4_vid
- 5_vid
- 6_vid
- 7_vid
- 8_vid
- 1_flm
- 2_flm
- 3_flm
- 4_flm
- 5_flm
- 6_flm
- 7_flm
- 8_flm
- NA (no standard WSS detected)

sInp1_WSS-Extd

This item displays the detected extended WSS value of input 1. This is displayed as follows:

- 4:3_0
- 4:3_1
- 4:3_2
- 4:3_3
- 4:3_4
- 4:3_5
- 4:3_6
- 4:3_7
- 16:9_0
- 16:9_1
- 16:9_2
- 16:9_3
- 16:9_4
- 16:9_5
- 16:9_6
- 16:9_7
- NA (no WSS extended detected)

sInp1_S2016

This item displays the detected SMPTE 2016 (AFD) values of input 1. This is displayed as follows:

- AFD0
- AFD1
- AFD2
- AFD3
- AFD4
- AFD5
- AFD6
- AFD7
- AFD8
- AFD9
- AFD10
- AFD11
- AFD12
- AFD13
- AFD14
- AFD15
- NA (no S2016 detected)

sInp1-Map
(GFS only)

This indicates the mapping of input 1 when the input format is 3Gb/s (1080p50 or 1080p60). Can be Level A or Level B. When the input format is not 1080p60 or 1080p50, this item indicates NA.

IODelayA

Displays the total delay in ms of the outputs. can be a value between 0ms and 15000ms.

SwitchLnA

Displays what line is detected the switchline. Can be any line between 0 and 1125.

SwitchLn_LenA

Displays the length of the detected switchline in pixels.

SwitchLn_PosA

Displays the position on the detected switchline where the switch occurred (in pixels). Only works on blanked switchlines.

FunctionA

Displays the current function of the outputs. For this card it can only be Trans, TestPattern or NA.

Ref

Displays whether a correct reference is found (Present) or not (NA)

GPI	Displays the currently closed GPI contacts. This is displayed as for instance 1_3_ when contacts 1 and 3 are closed and for instance _234 when contacts 2, 3 and 4 are closed.
GPIA	Displays the current value of GPI pool A
GPIB	Displays the current value of GPI pool B
GPIC	Displays the current value of GPI pool C
OutputA-Map (GFS only)	This indicates the mapping of the (last known) output when the output format is 3Gb/s (1080p50 or 1080p60). Can be `Level A` or `Level B`. When the output format is not 1080p60 or 1080p50, this item indicates `NA`.
	NET STATUS
IP_Addr0	This item displays the status of the IP address. It can be manual, DHCP asking, DHCP Leased or DHCP Infin.
MAC0	This item displays the MAC address of the card.
IP0	This item displays the current IP address of the card.
NM0	This item displays the current Netmask of the card.
GW0	This item displays the current Standard Gateway of the card.

7 Events Menu

Introduction

An event is a special message that is generated on the card asynchronously. This means that it is not the response to a request to the card, but a spontaneous message.

What is the Goal of an event?

The goal of events is to inform the environment about a changing condition on the card. A message may be broadcast to mark the change in status. The message is volatile and cannot be retrieved from the system after it has been broadcast. There are several means by which the message can be filtered.

Events

The events reported by the GFS/HFS/SFS010 are as follows;

Announcements

`Announcements` is not an event. This item is only used for switching the announcement of status changes on/off. 0=off, other =on

Input_A

Input_A can be selected between 0 .. 255. 0= no event, 1..255 is the priority setting.

Input_B

Input_B can be selected between 0 .. 255. 0= no event, 1..255 is the priority setting.

Ref-Status

Reference can be selected between 0 .. 255. 0= no event, 1..255 is the priority setting.

What information is available in an event?

The message consists of the following items;

1) A message string to show what has happened in text, for example: “INP_LOSS”, “REF_LOSS”, “INP_RETURN”.
2) A tag that also shows what happens, but with a predefined number: e.g. 1 (= loss of input), 2 (= loss of reference), 129(= 1+128 = return of input). For a list of these predefined tags see the table on the next page.
3) A priority that marks the importance of an event. This value is defined by the user and can have any value between 1 and 255, or 0 when disabled.
4) A slot number of the source of this event.

The Message String

The message string is defined in the card and is therefore fixed. It may be used in controlling software like Synapse Set-up to show the event.

The Tag

The tag is also defined in the card. The tag has a fixed meaning. When controlling or monitoring software should make decisions based on events, it is easier to use the tag instead of interpreting a string. The first implementation is the tag controlled switch in the GPI16.

In cases where the event marks a change to fault status (e.g. 1 for Loss of Input) the complement is marked by the tag increased by 128 (80_{hex}) (e.g. 129 (81_{hex}) for Return of Input).

Defining Tags

The tags defined for the card are:

Event Menu Item	Tag		Description
Announcements	0 or NA	0 or NA	Announcement of report and control values
Input_A	01_{hex}=INPA_LOSS	81_{hex}=INPA_RETURN	input A lost or returned
Input_B	02_{hex}=INPB_LOSS	82_{hex}= INPB_RETURN	input B lost or returned
Reference	03_{hex}=REF_LOSS	83_{hex}=REF_RETURN	reference lost or returned

The Priority

The priority is a user-defined value. The higher the priority of the alarm, the higher this value. Setting the priority to Zero disables the announcement of this alarm. Alarms with priorities equal or higher than the Error Threshold setting of the RRC will cause the error LED on the Synapse rack front panel to light.

The Address

Together with the message string or the tag, the slot number or address of the card is relevant to be able to assign the event to a certain card.

8 LED Indication

Error LED

The error LED indicates an error if the internal logic of the GFS/HFS/SFS010 card is not configured correctly or has a hardware failure.

Input_A LED

This LED indicated the presence of a valid SDI video signal on input A.

Input_B LED

This LED indicated the presence of a valid SDI video signal on input B.

ANC Data LED

Indicates the presence of embedded audio within the input signal.

Reference LED

Indicated the presence of a valid reference signal on the selected reference input connector (ref-1 or ref-2).

Data Error LED

This LED indicates a CRC error.

Connection LED

This LED illuminates after the card has initialized. The LED lights for 0.5 seconds every time a connection is made to the card.

Error LED

The error LED indicates an error if the internal logic of the card is not configured correctly or has a hardware failure.

9 Block Schematic

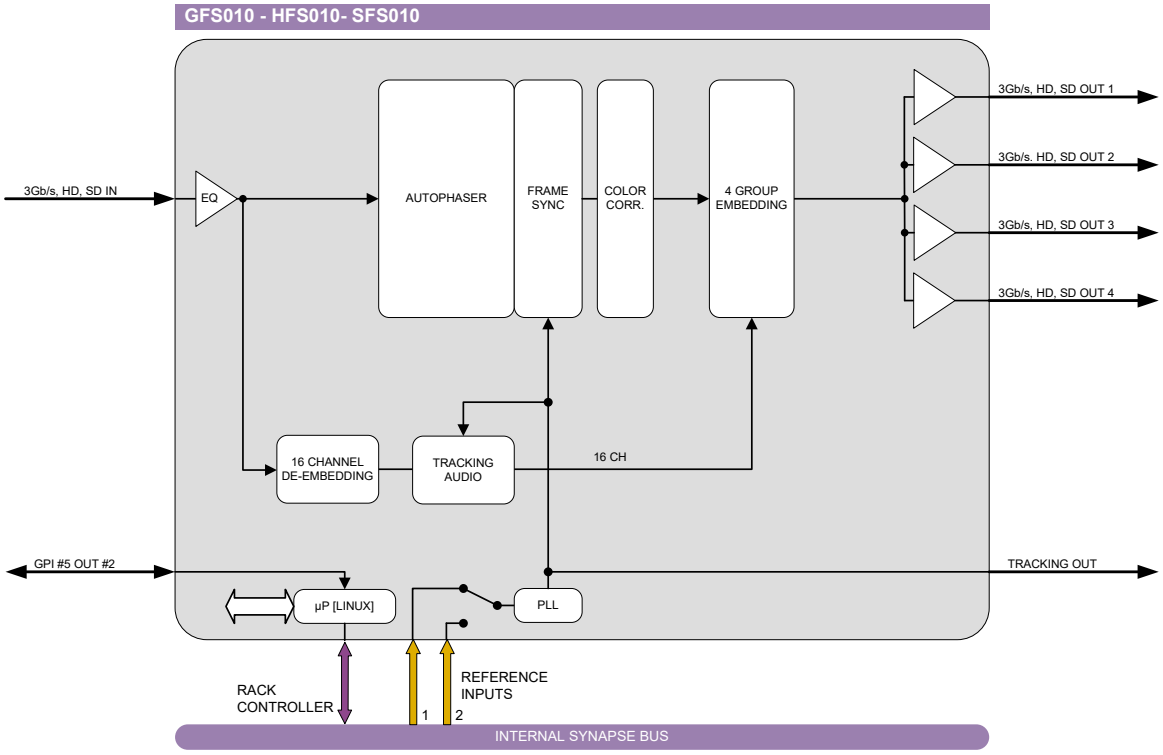

10 Connector Panels

The GFS/HFS/SFS010 can be used with the BPH17 or the BHX17b. The following table displays the pinout of these backpanels in combination with the card.

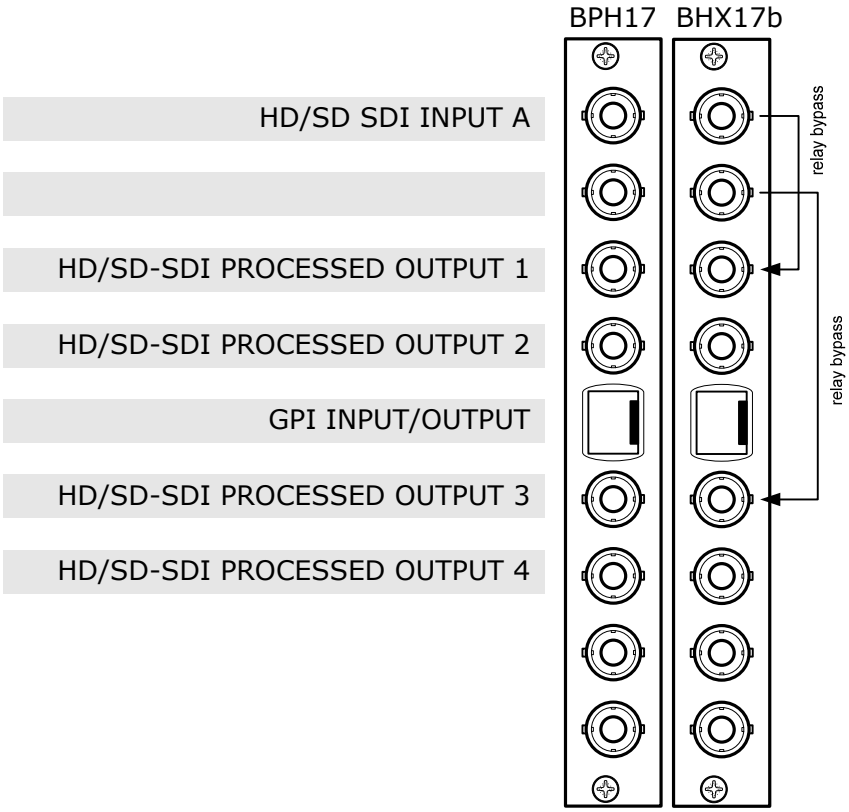

!Unused inputs and outputs must be terminated with the correct impedance!

!Please read Appendix 1 before connecting any backpanel!

GPI pinning

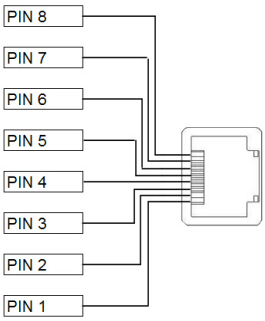

Pin	Function
1	GPI in 1
2	GPI in 2
3	GPI in 3
4	GPI in 4
5	GPI in 5
6	GPI out 1
7	GPI out 2
8	Ground

Appendix 1 Card dip-switches for BHX and fiber configuration

There are dip-switches on the circuit board of the card itself. With these dip-switches you can change the power-voltages that is put on the backpanel. By default the switches are set to off, putting no power on the backpanel. The picture below displays where the switch is positioned on the card.

!

When using a 'normal' BPH17 (passive) backpanel with this card, the dipswitch on the card itself must be switched OFF.

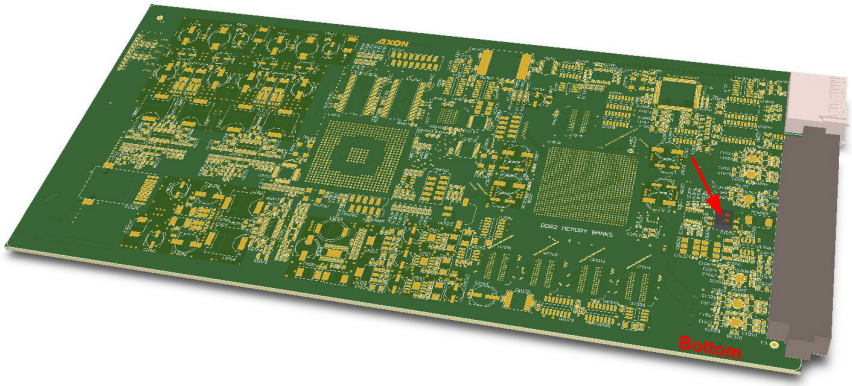

Using BPH17 with fiber I/O

When using a BPH17 backpanel with fiber I/O, you must first set the **top-side** dip-switch on the **synapse board** to 'on'. This will pass 30 volt to the backpanel. If this is not done, the relays won't work at all.

Using BHX17b

When using the backpanel with bypass relay (BHX17b), you must first set the **bottom-side** dip-switch **on the card** to 'on'. This will pass 5 volt to the backpanel. If this is not done, the relays won't work at all.

On the BHX17b itself there are also 2 dipswitches (see picture on the next page). The bottom dipswitch is not connected. With the top switch you can choose the Bypass function. There are 2 possible function indications "on" (printed on the dip switch itself) and "off":

"**Direct Backpanel Switchover**" dipswitch set to **ON**:
Will make the BHX-backpanel switch over to the processed signal as soon as it detects the trigger signal from the connected synapse card. This setting will minimize the bypass time and ensures fast

recovery of processed signals.
The **ON** setting is recommended if the BHX-backpanel is used in combination with synapse cards:

- which have a short initialization time, or
- which have a delayed trigger-signal onboard.

"**Direct Backpanel Switchover**" dipswitch set to **OFF (default)**:
Will make the BHX-backpanel switch after about 15 seconds from the moment the BHX-backpanel detects the trigger signal from the connected synapse card. This setting will allow more time for complex synapse cards to finish initialization and stabilize proper signal processing before the backpanel switches over to the processed signal.
The **OFF** setting is recommended if the BHX-backpanel is used in combination with synapse cards:

- which are more complex and thus need longer initialization time and do NOT have a delayed trigger-signal onboard.

Note: In case of power failure or when the synapse board is extracted from the frame the bypass is immediately active.

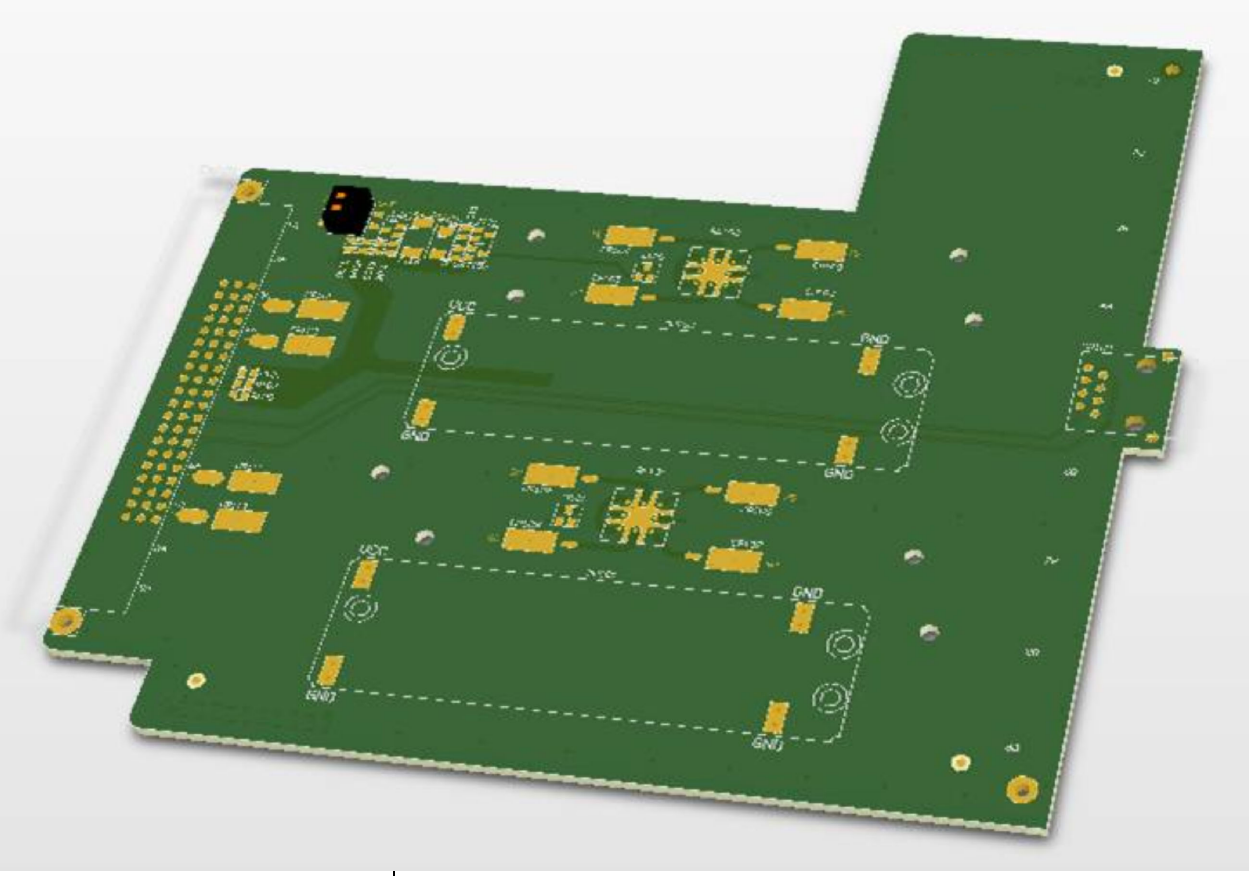

Appendix 2 GPI's explained

GPI pools

This card has 5 GPI contacts. Since there are several functions you can control by using GPI's (for instance: outmode and up/down/cross-presets and audio presets) you can add each individual GPI contact to certain GPI pools. Each pool can then be assigned to control a specific setting.

binary mode or priority mode

In the `GPI_1` till `GPI_5` settings you can appoint each GPI contact to one of the 3 available pools. The way these contacts act together depends on whether the pool works in binary or in priority mode.

Example 1

If we would like to control the up converter presets using Pool A (`Up_CtrlA` set to `GPI-A`) and the outmode setting using Pool B (`Out-mode-Ctrl` set to `GPI-B`). Both pools working in priority mode. We could do the following:

- Set `GPI_1` to `GPI Prio A`
- Set `GPI_2` to `GPI Prio A`
- Set `GPI_3` to `GPI Prio A`
- Set `GPI_4` to `GPI Prio A`
- Set `GPI_5` to `GPI Prio B`

Pool A now consists of GPI 1, GPI 2, GPI 3 and GPI 4 in a priority mode, controlling the Up converter preset. Pool B consists only of GPI 5 (also in a priority mode), controlling the Output mode setting.

Pool A now works as follows:

GPI_1 status	GPI_2 status	GPI_2 status	GPI_4 status	Set value
0	0	0	0	Up-conv Preset 1
1	0	0	0	Up-conv Preset 2
0	1	0	0	Up-conv Preset 3
0	0	1	0	Up-conv Preset 4
0	0	0	1	Up-conv Preset 5
0	1	1	0	Up-conv Preset **4** (because highest gets priority)
1	1	1	1	Up-conv Preset **5** (because highest gets priority)

Pool B now works as follows:

GPI_5 status	Set value
0	A out only
1	B out only

Example 2

Let's say we would like to control the up-converter presets using Pool A (`Up_CtrlA` set to `GPI-A`) in binary mode and the audio presets using Pool B (`Audio_Ctrl` set to `GPI-B`) in priority mode. We could do the following:

- Set `GPI_1` to `GPI-A`
- Set `GPI_2` to `GPI-A`
- Set `GPI_3` to `Take A`
- Set `GPI_4` to `GPI Prio B`
- Set `GPI_5` to `GPI Prio B`

Pool A now consists of GPI 1, GPI 2 and GPI 3 (as take), in a binary mode, controlling the Up converter preset. Pool B now consists of GPI 4 and GPI 5 in a priority mode, controlling the audio presets.

Pool A now works as follows:

GPI_1 status	GPI_2 status	Set value when GPI_3 (take) is closed
0	0	Up-conv Preset 1
1	0	Up-conv Preset 2
0	1	Up-conv Preset 3
1	1	Up-conv Preset 4

Pool B now works as follows:

GPI_4 status	GPI_5 status	Set value
0	0	Audio Preset 1
1	0	Audio Preset 2
0	1	Audio Preset 3
1	1	Audio Preset **3** (because highest gets priority)

Example 3

Let's say we would like to control the up-converter presets using Pool A (`Up_CtrlA` set to `GPI-A`) in priority mode, the audio presets using Pool B (`Audio_Ctrl` set to `GPI-B`) in priority mode, and Out mode control using Pool C (`Out-mode-Ctrl` set to `GPI-C`) also in prio mode. We could do the following settings:

- Set `GPI_1` to `GPI Prio A`
- Set `GPI_2` to `GPI Prio A`
- Set `GPI_3` to `GPI Prio B`
- Set `GPI_4` to `GPI Prio B`
- Set `GPI_5` to `GPI Prio C`

Pool A now consists of GPI 1 and GPI 2 in a priority mode, controlling the Up converter preset. Pool B now consists of GPI 3 and GPI 4 in a priority mode, controlling the audio presets. Pool C consists only of GPI 5 (also in priority mode)

Pool A now works as follows:

GPI_1 status	GPI_2 status	Set value
0	0	Up-conv Preset 1
1	0	Up-conv Preset 2
0	1	Up-conv Preset 3
1	1	Up-conv Preset **3** (because highest gets priority)

Pool B now works as follows:

GPI_3 status	GPI_4 status	Set value
0	0	Audio Preset 1
1	0	Audio Preset 2
0	1	Audio Preset 3
1	1	Audio Preset **3** (because highest gets priority)

Pool C now works as follows:

GPI_5 status	Set value
0	A out only
1	B out only

This product contains open-source software

This product contains open-source software licensed under the GNU Public License (GPL). A copy of the GNU Public License is included below. Under this license you are eligible to receive a copy of the source code of this software including any changes.

EVS Broadcast Equipment shall provide the source code on request either through physical distribution or electronic communication. For physical distribution you may be charged a fee that covers distribution costs. This offer is valid up to three years after date of purchase. Please direct your request to the support department of EVS Broadcast Equipment.

EVS Broadcast Equipment supports open-source software by participating in the development of open-source projects or submitting improvements to these projects. For more information see ftp://opensource.axon.tv.

GNU Public License version 2

TERMS AND CONDITIONS FOR COPYING, DISTRIBUTION AND MODIFICATION

0. This License applies to any program or other work which contains a notice placed by the copyright holder saying it may be distributed under the terms of this General Public License. The “Program”, below, refers to any such program or work, and a “work based on the Program” means either the Program or any derivative work under copyright law: that is to say, a work containing the Program or a portion of it, either verbatim or with modifi cations and/or translated into another language. (Hereinafter, translation is included without limitation in the term “modifi cation”.) Each licensee is addressed as “you”.

Activities other than copying, distribution and modifi cation are not covered by this License; they are outside its scope. The act of running the Program is not restricted, and the output from the Program is covered only if its contents constitute a work based on the Program (independent of having been made by running the Program). Whether that is true depends on what the Program does.

1. You may copy and distribute verbatim copies of the Program’s source code as you receive it, in any medium, provided that you conspicuously and appropriately publish on each copy an appropriate copyright notice and disclaimer of warranty; keep intact all the notices that refer to this License and to the absence of any warranty; and give any other recipients of the Program a copy of this License along with the Program.

You may charge a fee for the physical act of transferring a copy, and you may at your option offer warranty protection in exchange for a fee.

2. You may modify your copy or copies of the Program or any portion of it, thus forming a work based on the Program, and copy and distribute such modifications or work under the terms of Section 1 above, provided that you also meet all of these conditions:

a) You must cause the modified files to carry prominent notices stating that you changed the fi les and the date of any change.
b) You must cause any work that you distribute or publish, that in whole or in part contains or is derived from the Program or any part thereof, to be licensed as a whole at no charge to all third parties under the terms of this License.
c) If the modified program normally reads commands interactively when run, you must cause it, when started running for such interactive use in the most ordinary way, to print or display an announcement including an appropriate copyright notice and a notice that there is no warranty (or else, saying that you provide a warranty) and that users may redistribute the program under these conditions, and telling the user how to view a copy of this License. (Exception: if the Program itself is interactive but does not normally print such an announcement, your work based on the Program is not required to print an announcement.)

These requirements apply to the modified work as a whole. If identifiable sections of that work are not derived from the Program, and can be reasonably considered independent and separate works in themselves, then this License, and its terms, do not apply to those sections when you distribute them as separate works. But when you distribute the same sections as part of a whole which is a work based on the Program, the distribution of the whole must be on the terms of this License, whose permissions for other licensees extend to the entire whole, and thus to each and every part regardless of who wrote it.

Thus, it is not the intent of this section to claim rights or contest your rights to work written entirely by you; rather, the intent is to exercise the right to control the distribution of derivative or collective works based on the Program.

In addition, mere aggregation of another work not based on the Program with the Program (or with a work based on the Program) on a volume of a storage or distribution medium does not bring the other work under the scope of this License.

3. You may copy and distribute the Program (or a work based on it, under Section 2) in object code or executable form under the terms of Sections 1 and 2 above provided that you also do one of the following:

a) Accompany it with the complete corresponding machine-readable source code, which must be distributed under the terms of Sections 1 and 2 above on a medium customarily used for software interchange; or,
b) Accompany it with a written offer, valid for at least three years, to give any third party, for a charge no more than your cost of physically performing source distribution, a complete machine-readable copy of the corresponding source code, to be distributed under the terms of Sections 1 and 2 above on a medium customarily used for software interchange; or,
c) Accompany it with the information you received as to the offer to distribute corresponding source code. (This alternative is allowed only for noncommercial distribution and only if you received the program in objects code or executable form with such an offer, in accord with Subsection b above.)

The source code for a work means the preferred form of the work for making modifi cations to it. For an executable work, complete source code means all the source code for all modules it contains, plus any associated interface defi nition fi les, plus the scripts used to control compilation and installation of the executable. However, as a special exception, the source code distributed need not include anything that is normally distributed (in either source or binary form) with the major components (compiler, kernel, and so on) of the operating system on which the executable runs, unless that component itself accompanies the executable.

If distribution of executable or object code is made by offering access to copy from a designated place, then offering equivalent access to copy the source code from the same place counts as distribution of the source code, even though third parties are not compelled to copy the source along with the object code.

4. You may not copy, modify, sublicense, or distribute the Program except as expressly provided under this License. Any attempt otherwise to copy, modify, sublicense or distribute the Program is void, and will automatically terminate your rights under this License. However, parties who have received copies, or rights, from you under this License will not have their licenses terminated so long as such parties remain in full compliance.

5. You are not required to accept this License, since you have not signed it. However, nothing else grants you permission to modify or distribute the Program or its derivative works. These actions are prohibited by law if you do not accept this License. Therefore, by modifying or distributing the Program (or any work based on the Program), you indicate your acceptance of this License to do so, and all its terms and conditions for copying, distributing or modifying the Program or works based on it.

6. Each time you redistribute the Program (or any work based on the Program), the recipient automatically receives a license from the original licensor to copy, distribute or modify the Program subject to these terms and conditions. You may not impose any further restrictions on the recipients' exercise of the rights granted herein. You are not responsible for enforcing compliance by third parties to this License.

7. If, as a consequence of a court judgment or allegation of patent infringement or for any other reason (not limited to patent issues), conditions are imposed on you (whether by court order, agreement or otherwise) that contradict the conditions of this License, they do not excuse you from the conditions of this License. If you cannot distribute so as to satisfy simultaneously your obligations under this License and any other pertinent obligations, then as a consequence you may not distribute the Program at all. For example, if a patent license would not permit royalty-free redistribution of the Program by all those who receive copies directly or indirectly through you, then the only way you could satisfy both it and this License would be to refrain entirely from distribution of the Program.

If any portion of this section is held invalid or unenforceable under any particular circumstance, the balance of the section is intended to apply and the section as a whole is intended to apply in other circumstances.

It is not the purpose of this section to induce you to infringe any patents or other property right claims or to contest validity of any such claims; this section has the sole purpose of protecting the integrity of the free software distribution system, which is implemented by public license practices. Many people have made generous contributions to the wide range of software distributed through that system in reliance on consistent application of that system; it is up to the author/donor to decide if he or she is willing to distribute software through any other system and a licensee cannot impose that choice.

This section is intended to make thoroughly clear what is believed to be a consequence of the rest of this License.

8. If the distribution and/or use of the Program is restricted in certain countries either by patents or by copyrighted interfaces, the original copyright holder who places the Program under this License may add an explicit geographical distribution limitation excluding those countries, so that distribution is permitted only in or among countries not thus excluded. In such case, this License incorporates the limitation as if written in the body of this License.

9. The Free Software Foundation may publish revised and/or new versions of the General Public License from time to time. Such new versions will be similar in spirit to the present version, but may differ in detail to address new problems or concerns.

Each version is given a distinguishing version number. If the Program specifies a version number of this License which applies to it and "any later version", you have the option of following the terms and conditions either of that version or of any later version published by the Free Software Foundation. If the Program does not specify a version number of this License, you may choose any version ever published by the Free Software Foundation.

10. If you wish to incorporate parts of the Program into other free programs whose distribution conditions are different, write to the author to ask for permission. For software which is copyrighted by the Free Software Foundation, write to the Free Software Foundation; we sometimes make exceptions for this. Our decision will be guided by the two goals of preserving the free status of all derivatives of our free software and of promoting the sharing and reuse of software generally.

NO WARRANTY

11. BECAUSE THE PROGRAM IS LICENSED FREE OF CHARGE, THERE IS NO WARRANTY FOR THE PROGRAM, TO THE EXTENT PERMITTED BY APPLICABLE LAW. EXCEPT WHEN OTHERWISE STATED IN WRITING THE COPYRIGHT HOLDERS AND/OR OTHER PARTIES PROVIDE THE PROGRAM "AS IS" WITHOUT WARRANTY OF ANY KIND, EITHER EXPRESSED OR IMPLIED, INCLUDING, BUT NOT LIMITED TO, THE IMPLIED WARRANTIES OF MERCHANTABILITY AND FITNESS FOR A PARTICULAR PURPOSE. THE ENTIRE RISK AS TO THE QUALITY AND PERFORMANCE OF THE PROGRAM IS WITH YOU. SHOULD THE PROGRAM PROVE DEFECTIVE, YOU ASSUME THE COST OF ALL NECESSARY SERVICING, REPAIR OR CORRECTION.

12. IN NO EVENT UNLESS REQUIRED BY APPLICABLE LAW OR AGREED TO IN WRITING WILL ANY COPYRIGHT HOLDER, OR ANY OTHER PARTY WHO MAY MODIFY AND/OR REDISTRIBUTE THE PROGRAM AS PERMITTED ABOVE, BE LIABLE TO YOU FOR DAMAGES, INCLUDING ANY GENERAL, SPECIAL, INCIDENTAL OR CONSEQUENTIAL DAMAGES ARISING OUT OF THE USE OR INABILITY TO USE THE PROGRAM (INCLUDING BUT NOT LIMITED TO LOSS OF DATA OR DATA BEING RENDERED INACCURATE OR LOSSES SUSTAINED BY YOU OR THIRD PARTIES OR A FAILURE OF THE PROGRAM TO OPERATE WITH ANY OTHER PROGRAMS), EVEN IF SUCH HOLDER OR OTHER PARTY HAS BEEN ADVISED OF THE POSSIBILITY OF SUCH DAMAGES.

EVS Headquarters
Liège Science Park
13, rue Bois St Jean
B-4102 Seraing
Belgium

Corporate
+32 4 361 7000

North & Latin America
+1 973 575 7811

Asia & Pacific
+852 2914 2501

Other regional offices
www.evs.com/contact

To learn more about EVS go to **www.evs.com**