Synapse

HLD100

Solid state drive based HD-SDI JPEG2000 compressed
long time delay with optional logo insertion

Installation, Operation and Upgrade manual

Quad speed MASTER

Powered by LINUX

Committed.

AXON

Synapse

TECHNICAL MANUAL

HLD100

Lange Wagenstraat 55
NL-5126 BB Gilze
The Netherlands
Phone: +31 161 850 450
Fax: +31 161 850 499
E-mail: Info@axon.tv
Web: www.axon.tv

WARNING: TO REDUCE THE RISK OF FIRE OR ELECTRICAL SHOCK, DO NOT EXPOSE THIS APPLIANCE TO RAIN OR MOISTURE

● ALWAYS disconnect your entire system from the AC mains before cleaning any component. The product frame (SFR18, SFR08 or SFR04) must be terminated with three-conductor AC mains power cord that includes an earth ground connection. To prevent shock hazard, all three connections must always be used.
● NEVER use flammable or combustible chemicals for cleaning components.
● NEVER operate this product if any cover is removed.
● NEVER wet the inside of this product with any liquid.
● NEVER pour or spill liquids directly onto this unit.
● NEVER block airflow through ventilation slots.
● NEVER bypass any fuse.
● NEVER replace any fuse with a value or type other than those specified.
● NEVER attempt to repair this product. If a problem occurs, contact your local Axon distributor.
● NEVER expose this product to extremely high or low temperatures.
● NEVER operate this product in an explosive atmosphere.

Warranty: Axon warrants their products according to the warranty policy as described in the general terms. That means that Axon Digital Design BV can only warrant the products as long as the serial numbers are not removed.

Date created: 19-06-2012
Date last revised: 14-07-2014

This product complies with the requirements of the product family standards for audio, video, audio-visual entertainment lighting control apparatus for professional use as mentioned below.

CE	EN60950	Safety
	EN55103-1: 1996	Emission
	EN55103-2: 1996	Immunity

Axon Digital Design SLD100/120/200/220 Tested To Comply With FCC Standards FOR HOME OR OFFICE USE	This device complies with part 15 of the FCC Rules Operation is subject to the following two conditions: (1) This device may cause harmful interference, and (2) This device must accept any interference received, including interference that may cause undesired operation.

Table of Contents

1 Introduction to Synapse

An Introduction to Synapse

Synapse is a modular system designed for the broadcast industry. High density, intuitive operation and high quality processing are key features of this system. Synapse offers a full range of converters and processing modules. Please visit the AXON Digital Design Website at www.axon.tv to obtain the latest information on our new products and updates.

Local Control Panel

The local control panel gives access to all adjustable parameters and provides status information for any of the cards in the Synapse frame, including the Synapse rack controller. The local control panel is also used to back-up and restore card settings. Please refer to the rack controler manuals for a detailed description of the local control panel, the way to set-up remote control over IP and for frame related settings and status information.

Remote Control Capabilities

The remote control options are explained in the rack controller manual. The method of connection to a computer using Ethernet is also described in the ERC/ERS/RRC/RRS manual.

! **CHECK-OUT:** "AXON CORTEX" SOFTWARE WILL INCREASE SYSTEM FLEXIBILITY OF ONE OR MORE SYNAPSE FRAMES

Although not required to use Cortex with a Synapse frame, you are strongly advised to use a remote personal computer or laptop PC with Axon Cortex installed, as this increases the ease of use and understanding of the modules.

2 Unpacking and Placement

Unpacking

The Axon Synapse card must be unpacked in an anti-static environment. Care must be taken NOT to touch components on the card – always handle the card carefully by the edges. The card must be stored and shipped in anti-static packaging. Ensuring that these precautions are followed will prevent premature failure from components mounted on the board.

Placing the card

The Synapse card can be placed vertically in an SFR18 frame or horizontally in an SFR08 frame. **We advice not to use the SLD in an SFR04!**

Locate the two guide slots to be used, slide in the mounted circuit board, and push it firmly to locate the connectors.

The HLD100 consist out of two cards, the processing card and the card containing the SSD's. The cards have to be placed next to each other with the SSD card one slot number **lower** than the processing card. This means in an SFR18 the SSD card has to be inserted one slot on the **left** hand side of the processing card. In an SFR08 do **not** try to insert the processing card in slot 5 and the SSD in slot 4. This will **not** work!

Correct insertion of card is essential as a card that is not located properly may show valid indicators, but does not function correctly.

NOTE: On power up all LED's will light for a few seconds, this is the time it takes to initialise the card.

(Re)placing Solid State Disk

The Solid state disks have to be manually (re)placed. To do this, synapse card which contains the SSD's will have to be pulled out of the frame. This will cause output downtime!

After reseating the card, the buffer will be cleared and the recording starts from the beginning!

SSD1 is the disk closest to the card grip. SSD2 is the disk closest to the card connector, clearly indicated on the PCB itself. Use a small Philips screwdriver to unscrew the 4 screws of the disk that requires replacement. Carefully slide the disk out of the SATA connectors. Take the new disk and gently slide it into the SATA connectors. When the disk is in place, screw the disk steadfast onto the board with the 4 screws (M3*5CK). Below pictures (next page) shows the position of the disks and the screws of each SSD on the **bottom side** of the card.

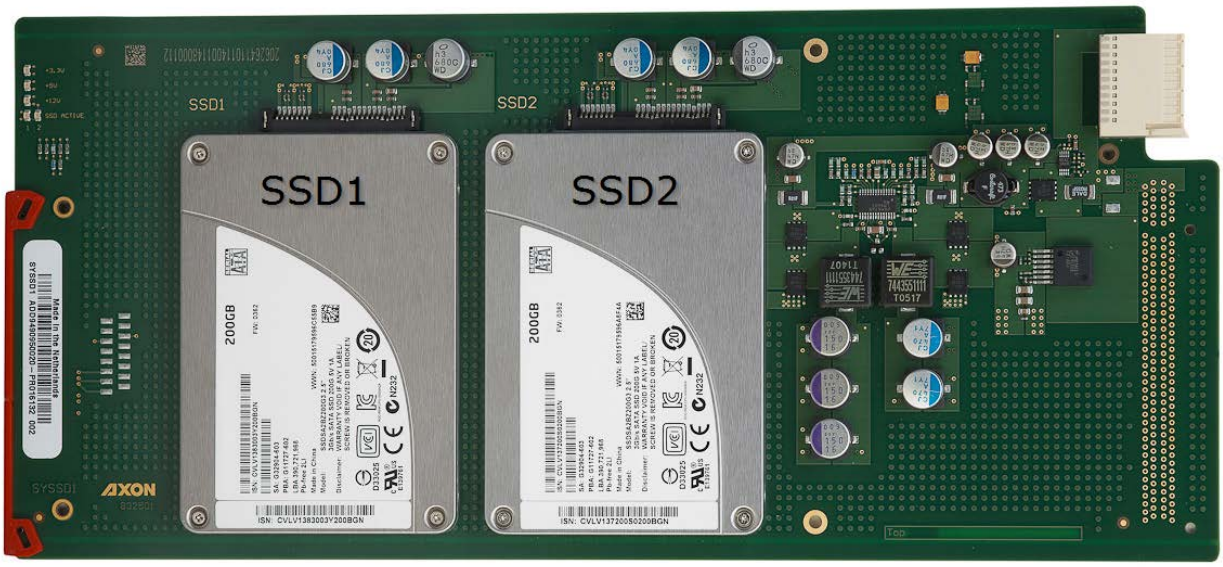

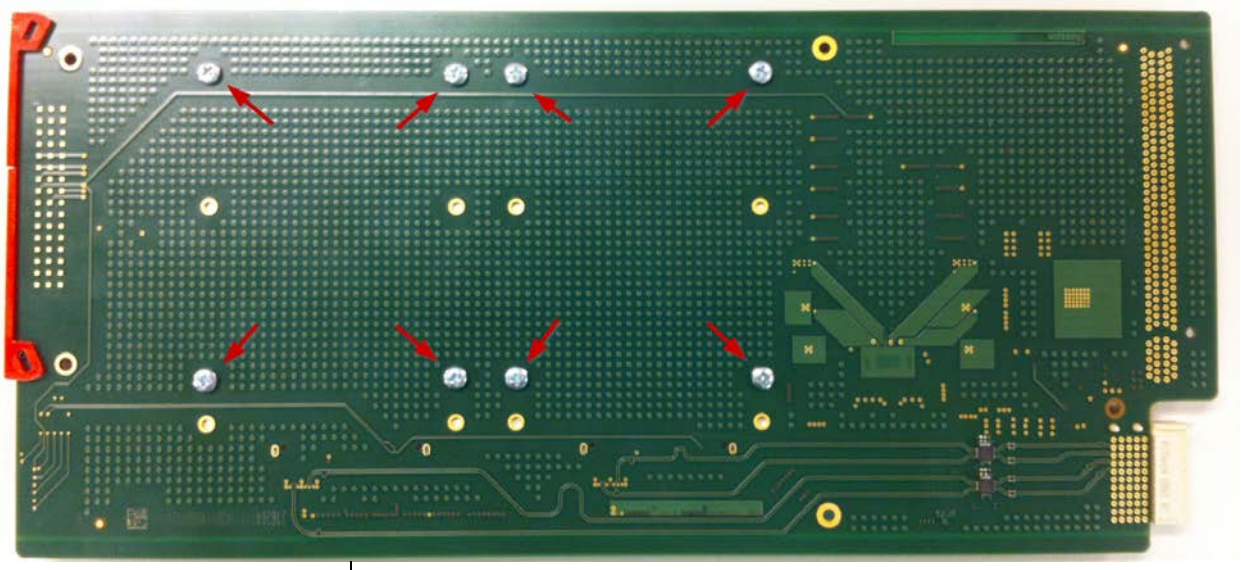

Axon approved disks

Please only use Axon tested and approved disks. These can be ordered at Axon or you can buy them yourself. The Approved disks are:

Intel SSD S3700 100 GB SSDSC2BA100G301 (1,5h delay); Axon art. Nr: MIC0000000001
Intel SSD S3700 200 GB SSDSC2BA200G301 (3h delay) ; Axon art. Nr: MIC0000000002
Intel SSD S3700 400 GB SSDSC2BA400G301 (6h delay) ; Axon art. Nr: MIC0000000003

http://ark.intel.com/nl/search?q=s3700

3 A Quick Start

When powering-up

On powering up the Synapse frame, the card set will use basic data and default initialisation settings. All LED's will light during this process. After initialisation, several LED's will remain lit – the exact number and configuration is dependent upon the number of inputs connected and the status of the inputs.

Changing settings and parameters

The front panel controls or the Axon Cortex can be used to change settings. An overview of the settings can be found in chapter 5, 6 and 7 of this manual.

Front Panel Control

Front Panel Display and Cursor

```
[No Alarms]
```

Settings are displayed and changed as follows;

Use the cursor 'arrows' on the front panel to select the menu and parameter to be displayed and/or changed.

Press ►	To go forward through the menu structure.
Press ◄	To go back through the menu structure.
Press ▲	To move up within a menu or increase the value of a parameter.
Press ▼	To move down through a menu or decrease the value of a parameter.

NOTE: Whilst editing a setting, pressing ► twice will reset the value to its default.

Example of changing parameters using front panel control

With the display as shown below

```
RRC18 [Select Card]
>S01=SFS10
```

Pressing the ► selects the SFS10 in frame slot 01.

The display changes to indicate that the SFS10 has been selected. In this example the `Settings` menu item is indicated.

```
SFS10 [Select Menu]
>Settings
```

Pressing the ► selects the menu item shown, in this example `Settings`.

(Pressing ▲ or ▼ will change to a different menu eg `Status, Events`).

The display changes to indicate that the SFS10 `Settings` menu item `SDI-Format` has been selected and shows that it current setting is `Auto`.

```
SFS10 [Settings]
>SDI-Format=Auto
```

Pressing the ► selects the settings item shown, in this example `SDI-Format.`

(Pressing ▲ or ▼ will change to a different setting, eg `Mode, H-Delay`).

The display changes to indicate that the SFS10 `Edit Setting` menu item `SDI-Format` has been selected.

```
SFS10 Edit Setting]
SDI-Format>Auto
```

To edit the setting of the menu item press ▲ or ▼.

All menu items can be monitored and/or changed in this way. Changing a setting has an immediate effect.

Axon Cortex Software

Axon Cortex can be used to change the settings of Synapse modules from a PC, either locally or remotely. The software enables communication based on TCP/IP between the Setup PC and Synapse frames/modules.

Each Synapse frame is addressed through its rack controller's unique IP address, giving access to each module, its menus and adjustment items. Axon Cortex has access to data contained within the Synapse module and displays it on a GUI. The software has an intuitive structure following that of the module that it is controlling.

For operation of Axon Cortex, please refer to the Cortex help files.

Menu Structure Example

Slot	Module		Item		Parameter		Setting
▲							
▲							
S02			Identity				
▲			▲				
S01	SFS10	▶	Set-tings	▶	Standard_dig	▶	Auto
▼			▼		▼		▼
S00	RRC18		Status		Mode		625
			▼		▼		▼
			Events		Ref-Input		525
					▼		
					H-Delay		
					▼		
					▼		

NOTE: Further information about Front Panel Control and Axon Cortex can be obtained from the ERC, ERS, RRC and RRS operational manuals and the Cortex help files.

4 The HLD Card

Introduction

The HLD100 family are a long time HD-SDI JPEG2000 compressed video delays. It can store and delay HD material, including all blanking, as RAW data. The compression used is JPEG2000 at up to 150Mbps for high quality.

These long time delays can store and delay up to 6 hours of SDI material depending on the size of disks, bitrates and ANC data. (with 2x 400G drives)

The use of SSD disks makes this unit extremely reliable, low power and it will provide low maintenance.[1)] The delay length is depending on the used size of the SSD disks giving increased capacity at low cost in upcoming years.

MTBF of disks is dependent on storage capacity and brand (type). Twice the storage than needed means theoretical twice the lifecycle as this is coupled to the amount of write cycles, not read cycles.

Compared to competitive server based solutions the HLD100 family can be considered as very GREEN. The power consumption of this dual slot device is approximately 40W. This is a 10 fold saving of a comparable server based unit that draws > 350W average saving a significant amount of money due to the low operating power and accompanying air conditioning.

The hardware of the long time delays is fully 3Gb/s and HD-SDI capable ensuring future proof investment for later planned updates into 3Gb/s and HD

Features

- HLD100 = basic single channel delay unit
- Capable of delaying video up to 6 hours (with 2 400G disks), including ANC data
- Two preset banks per bug inserter (SLD120 only) with memory for 16 bugs
- Output freezes on disk failure
- Targa and PNG logo support
- SSD20 card added for SMART disk status
- RAW delay
- Full control and status monitoring through the front panel of the SFR04/SFR08/SFR18
- frame and the Ethernet port (ACP)

Applications

- +1 hour film channels (up to +6 hours)
- Time zone compensation
- Clip server

Block schematic

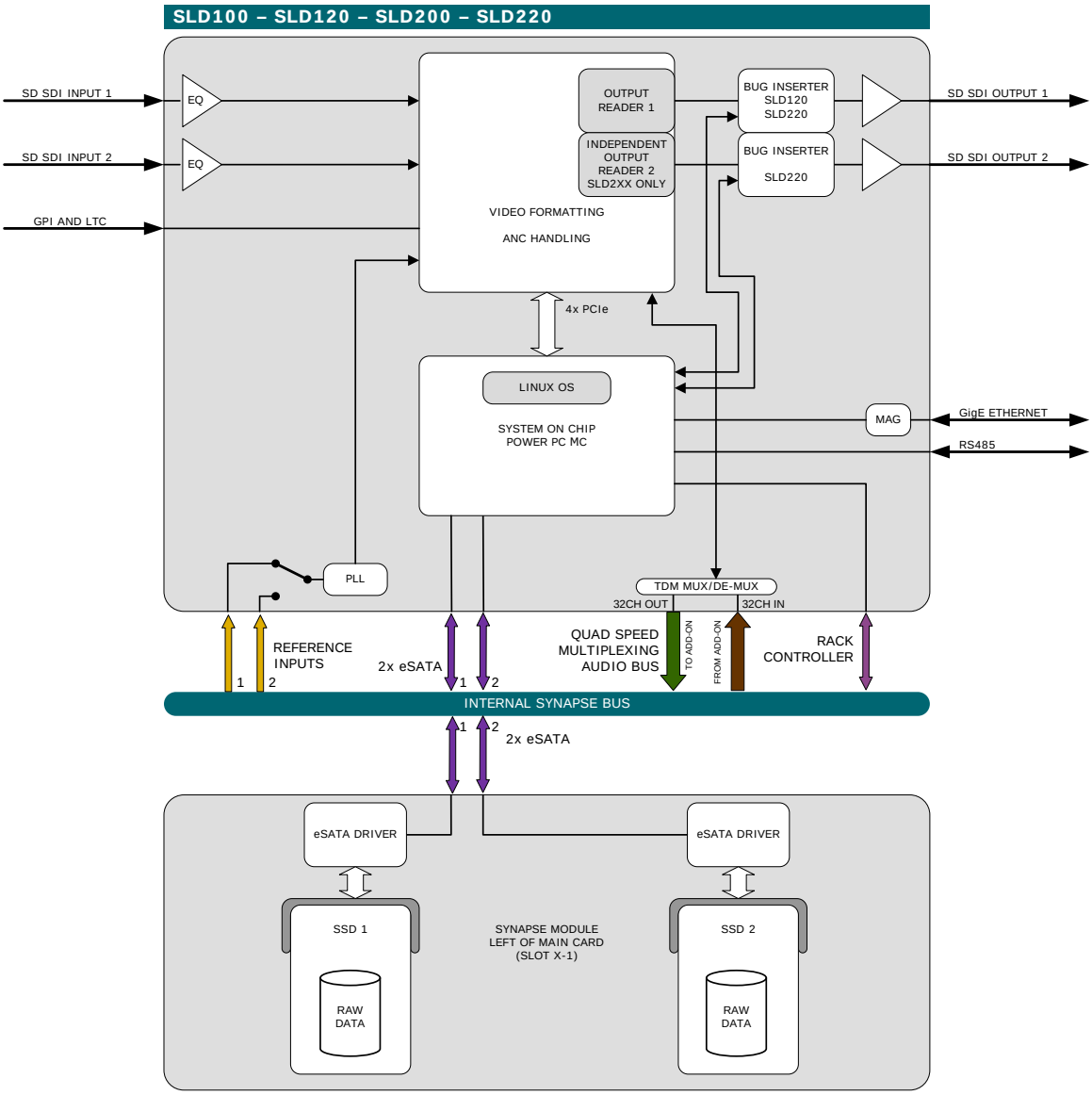

5 Settings Menu

Introduction

The settings menu displays the current state of each SLD setting and allows you to change or adjust it. Settings can be changed using the front panel of the Synapse frame (SFR18 or SFR08) or with Cortex. Also the Synapse or Cortex control panels can be used. Please refer to chapter 3 for information on the Synapse front panel control and Cortex.

Note: All items preceded with a #-sign are part of the presets.

Out-Frmt

With `Out-Frmt` you can set what the output should be. This setting is only used for the delay options. This will not up/down/cross convert your input signal. Possible settings are:

- `1080i60`
- `1080i50`
- `720p60`
- `720p50`
- `SD525`
- `SD625`

H-delay

Here you set the H delay offset of the output timing with respect to the chosen reference in pixels. Range varies with the selected standard. For example 0..1919 pixels in 1080i50.

V-delay

Here you set the V delay offset of the output timing with respect to the chosen reference in lines. Range varies with the selected standard. For example 0..1124 lines in 1080i50.

Include ANC

Here you set which part of the ANC data is recorded and therefore transparent on the output. You can choose None, H_only, V_only or H_and_V. Note this uses diskspace and shortens the maximum delay.

Compression

Here you set the bitrate of the JPEG2000 compression. Range is 150Mbps to 25Mbps in steps of 25Mbps.

RunIn-Frames

Here you set what should be on the output during run-in (the time between input and the start of the delayed output). You can choose the output during this period to be a `colorbar`, `black`, `grey`, `green` or a `freeze` of the first frame to be played. Default is `Freeze`.

RunOut-Frames

Here you set what should be on the output during run-out (The time after all the `Record-Run` content has been played). You can choose the output during this period to be a `colorbar`, `black`, `grey` or `green`. Default is `Colorbar`.

Lock-Mode	`Lock-Mode` determines to what source the card is locked. This setting is fixed to reference input 1 (`Ref1`).
Ref-Type	Sets the type of incoming reference. This setting is fixed to `Bi-Level`.
Time-Source	Here you set the time synchronization source. Currently fixed to NTP.
Output1-enable	Enables or disables output 1. What the output will be in delay, with respect to the input, is set with the settings with a '`Delay1_`'-prefix. Can also be set to `Pause` (which will pause the output on the current frame) or to `Edit` (the output jumps to the active marker that can be modified)
Output1-Overlay	The HLD has on screen display which can show different kinds of information as overlay over video output 1. For the SLD120 you can set a logo as overlay on output 1. These are the possible overlays: ▪ `HW-status`: showing CPU Environment temp, CPU core temp, FPGA Environment temp, FPGA Core temp and FPGA fan speed. ▪ `Disk-Status`: showing overall SSD status (tested mean the disk is tested Axon approved, untested means the disk is not tested and thus not approved by Axon), SSD model, SSD serial number, SSD size (in GB), Average reading bitrate and average writing bitrate. ▪ `Buffer-Status`: showing the status of the buffer and the markers. The total size of the buffer (the maximum achievable delay), the amount of buffer which is currently filled, The position of Output 1 and the position of Ouput 2. Next to these 4 buffer statuses the 4 marker values are indicated. In the graphical display of the buffer the markers are indicated in the respective colors. ▪ `Logo-InserterA:` Overlay the logo(s) which is set with the Logo-inserterA settings (SLD120 only).
Delay1_Hours	With this setting you set the video delay hours of output 1 (with respect to the input).
Delay1_Mins	Here you set the video delay minutes of output1 (with respect to the input)
Delay1_Seconds	Here you set the video delay seconds of output1 (with respect to the input)
Delay1_Frames	Here you set the video delay frames of output1 (with respect to the input)

Output2-enable

Enables or disables output 2. On the HLD100/120 the delay of output 2 is the same as the delay of output 1, set with the Delay1_xxx settings.

Output2-Overlay

The HLD has on screen display which can show different kinds of information as overlay over video output 2. For the HLD120 you can set a logo as overlay on output 2. The same overlays are possible as explained in `Output1_Overlay`.

Panic_Fill

Sets the fill mode of the Panic (emergency) overlay.

Set to `Fit` will respect the incoming aspect ratio and fill the window using the maximum available length or width and leaving the empty areas black.

Set to `Zoom`, the screen will be zoomed in, with respect to the incoming aspect ratio, causing the picture to be cut off on the sides when the window is not of the same aspect ratio.

Set to `Anamorphic`, the picture will be set to fill the entire window but when the input aspect ratio is not the same as the aspect ratio of the window, the view will be anamorphic.

In `Raw` the logo is displayed without adjustments.

Monitor-Temp

With this setting you can change the way the temperature is measured. Can be set to `On` (constantly monitor the temperatures and update the temperature status items), `Once` (measure the temperatures and update the temp status items once, after which this setting returns of off) or `Off` (don't update the temp statuses).

Monitor-Disks

With this setting you can change the way the disks are checked. Can be set to `On` (constantly monitors the statuses of the disks and updates the disk status items), `Once` (check the disk status and update the disk status items once, after which this setting returns to off) or `Off` (don't update the disk statuses).

Marker

This is the sort-of preset master for the marker settings. There are 4 marker presets: `Marker_1`, `Marker_2`, `Marker_3` and `Marker_4`. With this setting you select which marker you want to view and/or change the settings of. Settings with a '`#Marker-`' prefix (further down the menu) are all part of this preset.

PrstEditView

The markers function as a preset. With this setting set to `Follow Active`, the `Marker` settings will follow the active `marker` when the active `Marker` is changed. This to avoid confusion when changing the active. Set to `Independent` the `Marker` setting will not automatically follow active `marker`s changes. By default set to `Follow Active`.

#Marker-Val	This is the actual value of the marker (selected with the `Marker` preset master setting). The value in the classic view is set in frames (up to 2147483647 frames). Please use the Cortex CLF of the SLD to change this setting in a more human-readable format (hours, minutes, seconds, frames).
#Marker-Cmd	There are a few default commands which you can perform with the marker presets: - `None`: do nothing with the marker. - `Mark Inp`: the value of the marker is set to resemble the current input position. - `Set Delay1`: The 'Delay1_' settings are set to resemble the marker value. In other words: output 1 will start playing from the point of the marker. - `Clear`: completely clear the marker value (set to -1).
#Marker-Name	With this setting you can give a name to the marker selected with the `marker` preset master setting. Maximum of 16 characters is allowed.
#Marker-H	Here you can set the marker position in hours
#Marker-M	Here you can set the marker position in minutes
#Marker-S	Here you can set the marker position in seconds
#Marker-F	Here you can set the marker position in frames
	NTP SETTINGS
NTPServer	With this setting you set the NTP server (either an IP address or a dynamic url). For instance: `pool.ntp.org` or `192.168.1.10`
NTPOffsetH	Here you can manually set an offset in hours (timezone compensation). Day-light saving is not taken into account!
NTPOffsetM	Here you can manually set an offset in minutes (timezone compensation).

	NETWORK
IP_Conf0	With this setting you can let the card obtain an IP address automatically via `DHCP`, or appoint a `manual` set IP address. By default this setting is set to `Manual`.
mIP0	When IP_Conf0 is set to manual, you can type in the preferred IP address.
mNM0	With IP_Conf0 set to manual, with this setting you can set a Netmask.
mGW0	With IP_Conf0 set to manual, this setting let you set a Standard Gateway.
NetwPrefix0	This item sets the network prefix with `IP_conf0` set to `manual`. Can be set between `0` and `30` bit. By default it is set to `0` bit

6 Status Menu

Introduction

The status menu indicates the current status of each item listed below.

SDI-Input_1

This status item indicates the presence and format of a valid signal in input 1. This is displayed as:

- `1080P60`
- `1080p50`
- `1080i60`
- `1080i50`
- `1080p30`
- `1080p25`
- `1080p24`
- `1035i60`
- `720p60`
- `720p50`
- `SD525`
- `SD625`
- `NA`

SDI-Input_2

This status item indicates the presence and format of a valid signal in input 2. This is displayed as listed under `SDI-Input1`.

Buffer-Size

Indicates the total buffer size with the currently installed solid state disks (hh:mm:ss).

Buffer-Fill

Indicates the buffer size which is currently in use (hh:mm:ss)

Marker1-Pos ~ Marker4_Pos

Indicates the position of each individual marker in hh:mm:ss (delay with respect to the input).

GPI-Active

Indicates which GPI value is currently active.

	DISK STATUS
Disk1_Status	This status item indicates the overall disk status of SSD 1: `OK - Tested`: The disk is OK and it's a model which is tested and approved by Axon. `OK - Untested`: The disk is OK but it's a model which is not tested by Axon and therefore unapproved. `Slow`: The disk is getting slow and should be replaced `Unstable`: The disks SMART values indicate that this disk is unstable and should be replaced `MTBF Reached`: The disk's MTBF (the manufacturer's given Main Time Between Failures) is reached. Replacement is advised.
Disk1_Model	Indicates the model number of SSD 1.
Disk1_Serial	Indicated the serial number of SSD 1.
Disk1_Size	Indicates the disk size of SSD 1 in GB.
Disk1_AvgRead	Indicates the average reading bitrate of SSD 1 in MBps.
Disk1_AvgWrite	Indicates the average writing bitrate of SSD 1 in MBps
Disk2_Status	This status item indicates the overall disk status of SSD 2: `OK - Tested`: The disk is OK and it's a model which is tested and approved by Axon. `OK - Untested`: The disk is OK but it's a model which is not tested by Axon and therefore unapproved. `Slow`: The disk is getting slow and should be replaced `Unstable`: The disks SMART values indicate that this disk is unstable and should be replaced `MTBF Reached`: The disk's MTBF (the manufacturer's given Main Time Between Failures) is reached. Replacement is advised.
Disk2_Model	Indicates the model number of SSD 2.
Disk2_Serial	Indicated the serial number of SSD 2.

Disk2_Size	Indicates the disk size of SSD 2 in GB.
Disk2_AvgRead	Indicates the average reading bitrate of SSD 2 in MBps.
Disk2_AvgWrite	Indicates the average writing bitrate of SSD 2 in MBps
CPU_Env_Temp	Indicates the CPU environment temperature in degrees Celsius.
CPU_Core_Temp	Indicates the CPU Core temperature in degrees Celsius.
FPGA_Env_Temp	Indicates the FPGA environment temperature in degrees Celsius.
FPGA_Core_Temp	Indicates the FPGA Core temperature in degrees Celsius.
FPGA_Fan	Indicates the FPGA fan speed in rounds per minute.
	NET STATUS
IP_Addr0	This item displays the status of the IP address. It can be manual, DHCP asking, DHCP Leased or DHCP Infin.
IP0	This item displays the current IP address of the card.
MAC0	This item displays the MAC address of the card.
NM0	This item displays the current Netmask of the card.
GW0	This item displays the current Standard Gateway of the card.

7 Events Menu

Introduction

An event is a special message that is generated on the card asynchronously. This means that it is not the response to a request to the card, but a spontaneous message.

What is the Goal of an event?

The goal of events is to inform the environment about a changing condition on the card. A message may be broadcast to mark the change in status. The message is volatile and cannot be retrieved from the system after it has been broadcast. There are several means by which the message can be filtered.

Events

The events reported by the card are as follows;

Announcements

`Announcements` is not an event. This item is only used for switching the announcement of status changes on/off. 0=off, other =on

What information is available in an event?

The message consists of the following items;

1) A message string to show what has happened in text, for example: “INP_LOSS”, “REF_LOSS”, “INP_RETURN”.
2) A tag that also shows what happens, but with a predefined number: e.g. 1 (= loss of input), 2 (= loss of reference), 129(= 1+128 = return of input). For a list of these predefined tags see the table on the next page.
3) A priority that marks the importance of an event. This value is defined by the user and can have any value between 1 and 255, or 0 when disabled.
4) A slot number of the source of this event.

The Message String

The message string is defined in the card and is therefore fixed. It may be used in controlling software like Cortex to show the event.

The Tag

The tag is also defined in the card. The tag has a fixed meaning. When controlling or monitoring software should make decisions based on events, it is easier to use the tag instead of interpreting a string. The first implementation is the tag controlled switch in the GPI16.

In cases where the event marks a change to fault status (e.g. 1 for Loss of Input) the complement is marked by the tag increased by 128 (80_{hex}) (e.g. 129 (81_{hex}) for Return of Input).

Defining Tags

The tags defined for the card are:

Event Menu Item	Tag		Description
Announcements	0 or NA	0 or NA	Announcement of report and control values

The Priority

The priority is a user-defined value. The higher the priority of the alarm, the higher this value. Setting the priority to Zero disables the announcement of this alarm. Alarms with priorities equal or higher than the Error Threshold setting of the RRC will cause the error LED on the Synapse rack front panel to light.

The Address

Together with the message string or the tag, the slot number or address of the card is relevant to be able to assign the event to a certain card.

8 LED Indication

Introduction

LEDS are located on the front of the card next to the card grip as shown in the picture below. The LEDS give an indication of the status of the SLD100/200.

Error LED

The error LED indicates an error if the internal logic of the card is not configured correctly or has a hardware failure.

Input_1 LED

This LED indicated the presence of a valid SDI video signal on input 1.

Input_2 LED

This LED indicated the presence of a valid SDI video signal on input 2.

ANC Data LED

Indicates the presence of embedded audio within the input signal.

Reference LED

Indicated the presence of a valid reference signal on the selected reference input connector (ref-1 or ref-2).

Data Error LED

This LED indicates a CRC error.

Connection LED

This LED illuminates after the card has initialized. The LED lights for 0.5 seconds every time a connection is made to the card.

Error LED

The error LED indicates an error if the internal logic of the card is not configured correctly or has a hardware failure.

9 Connector Panels

The HLD100 can be used with the BHX27 backpanel. The following table displays the pinout of these backpanels in combination with the card.

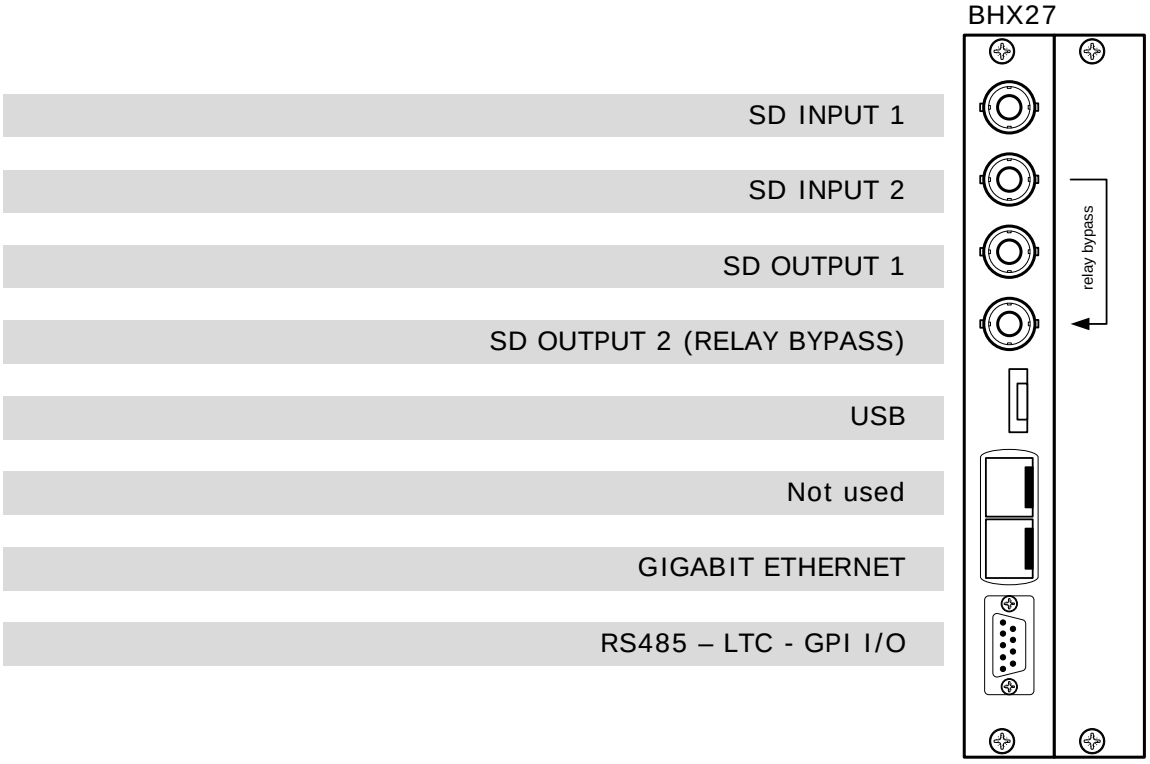

D-sub pinning

Note: GPI's work in a latching mode

Of the 15-pole subD connector:

pin 01 = RX2B
pin 02 = TX2A
pin 03 = GPI_1
pin 04 = GPI_3
pin 05 = GPI_2
pin 06 = RX2A
pin 07 = GND
pin 08 = LTC-
pin 09 = GPI_4
pin 10 = GPI_7
pin 11 = TX2B
pin 12 = LTC+
pin 13 = GPI_5
pin 14 = GPI_8
pin 15 = GPI_6

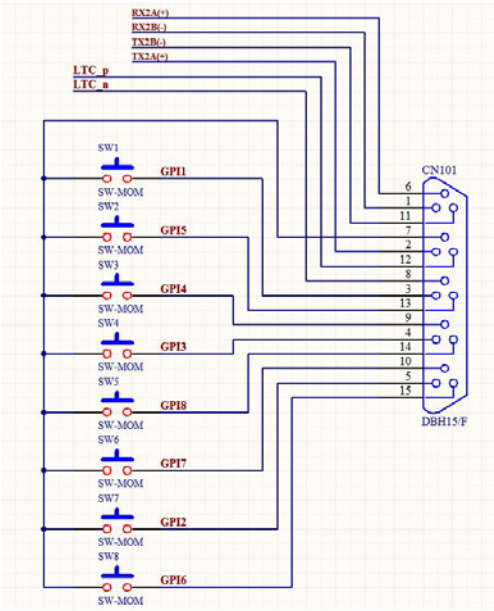

Before you start

Functionality explanation

A Synapse card's functionality is decided by 2 parts: the hardware platform and the software (a.k.a. firmware) that resides on the hardware platform. Changing the firmware of the cards means changing the way the card functions. To keep improving quality and to answer our customer's demands, Axon sometimes releases new software revisions of Synapse cards. These software revisions are formatted in 1 file per revision, with a .spf extension. Customers can download these .spf files from our website, or receive them via e-mail from our support so they can upgrade or reprogram their own cards.

Choosing .spf files

Not all .spf files are compatible with all hardware platforms. To know for certain that you are choosing a compatible .spf file you have to know the hardware revision of your card. This revision number can be found in the menu of the card via the control panel on the frames (select card, select 'about', check HW number) or via Cortex (Axon's control software) (select frame, select card, select 'Identity', check 'hardware rev').

Knowing the hardware revision number, you can go to our website (www.axon.tv) and go to our download firmware section. Here you select the card you wish to upgrade. You will see a list of available firmware upgrades of this particular card. The firmware files that are compatible with your card should display your card's hardware revision number in table next to "Hardware versions". If this is not the case you will not be able to upgrade your card with that file.

Requirements

For reprogramming or upgrading cards, you need the Cortex program installed on a PC or laptop which is connected to the same network to which the card is connected also. You can download the program free of charge from our website. For this this card you need to use Cortex version v1.091 or later. Updating the card must be done locally (direct connection) through the Ethernet of the backplane. The bottom Ethernet connection must be used.

Using Cortex help files

This manual describes how to upgrade cards using Cortex. When you are using Cortex and require card further instructions, please refer to the Cortex help files (select 'Card' in the menu > select 'Upload Firmware' (the firmware uploading window will open) > press F1).

Precautions

Backup your settings

It is advised to backup the settings before upgrading the card. To do this, select the frame and card you want to upgrade. Then choose “Card” in the menu and select “Backup card”. An exact copy of the card’s menu can be stored as .xml file in the following window. The next image displays the window where this is done.

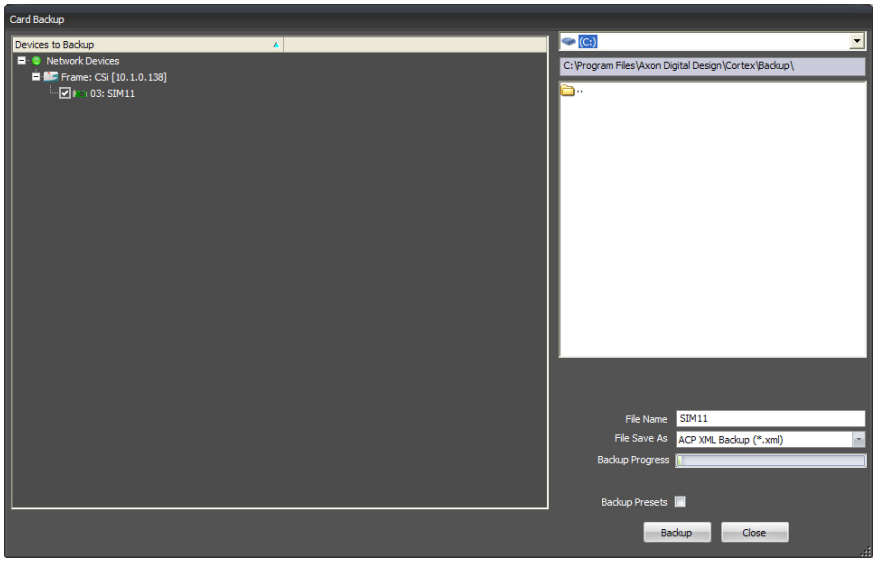

At your own risk

During the upgrade process, the card will stop functioning for a period of time. Make sure the card you are going to upgrade is currently ***not*** being used by anyone in your company.

Note

Use cortex version 1.09.01 or later. This software can be downloaded from our website. www.axon.tv

Setting up card

To be able to program the card direct we need to perform two steps. One is setting up of the IP address of the card and second will be making the board recognized as stand alone entity.

To set-up the IP address of the card goto the system view within the Cortex program. Select the SLDxxx and goto the device view tab. Within the device tab you will be able to setup the IP address, netmask and gateway.

The next step is to make the card available as a stand alone card within the system. To add this card you need to go to the network tab at the top of the cortex program. Then go to add network device and choose add ACP device.

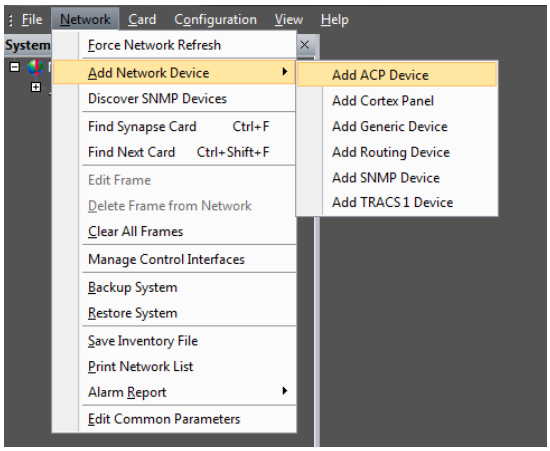

Fill out the name of the card and also the ip address.

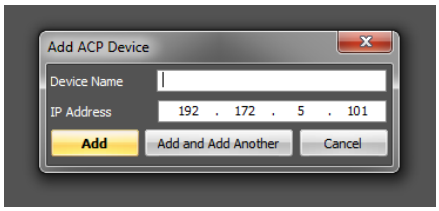

Upload firmware

You can start upgrading the card. To do this, click ‘Card’ in the top menu and select ‘Upload Firmware’ from the dropdown box as displayed below.

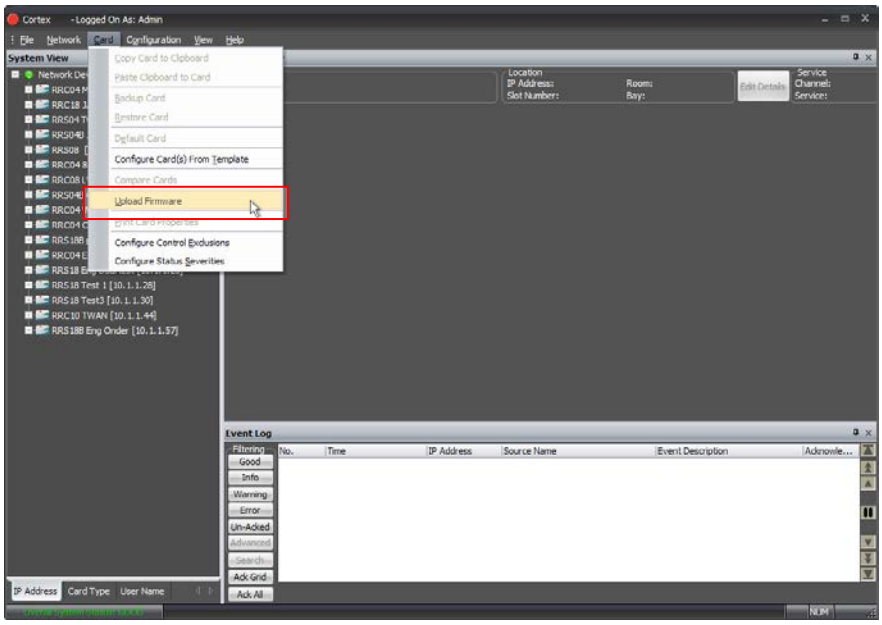

A new window will open, showing you the firmware upload functions. ***At first you must select which .spf file you want to load***. You do this in the buttom dialog as shown below.

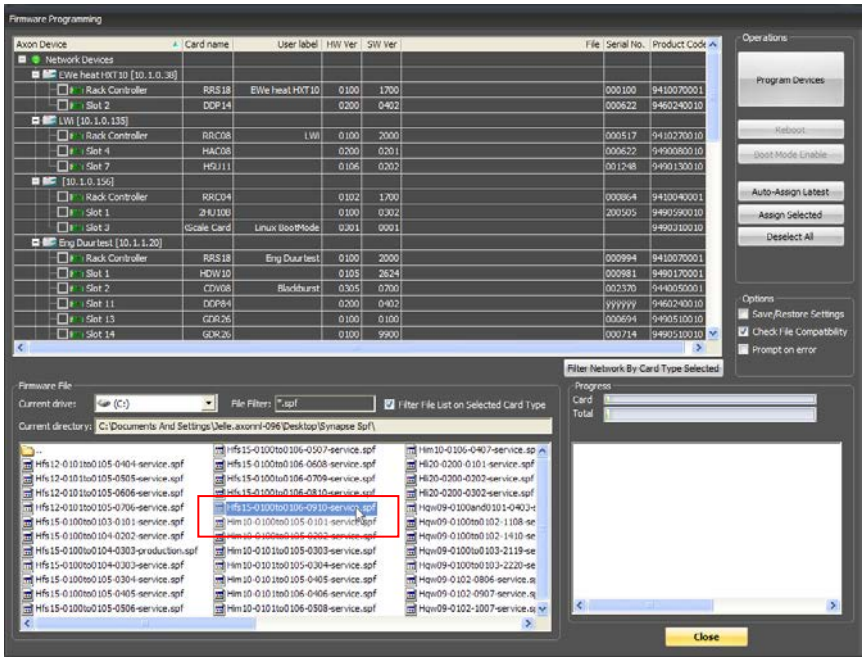

To select which .spf you would like to upload into the card, you click the ‘Current drive’ button and select the folder which holds your .spf files.

When you selected the .spf file, check the card(s) in which you want to load this .spf file. You can load multiple cards with the same .spf file at the same time. When the selected .spf file can not be loaded in the card you try to check an error message will appear in the bottom right box. Selecting a card is done as displayed on the next page.

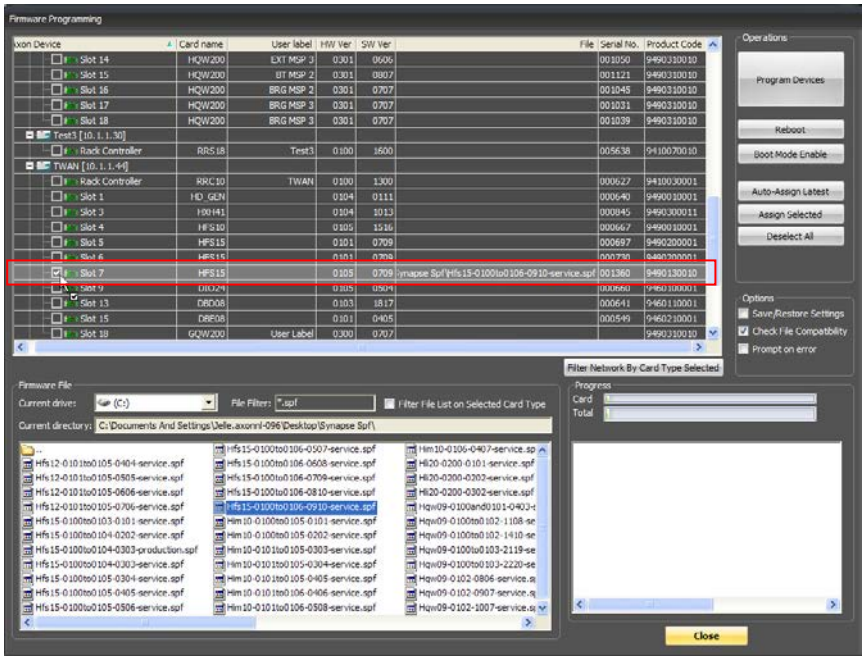

Testing

When all previous instructions have been completed the card should be functioning properly. We advise however to test the card's functionallity before you are going to put it into real on-air use.

This product contains open-source software

This product contains open-source software licensed under the GNU Public License (GPL). A copy of the GNU Public License is included below. Under this license you are eligible to receive a copy of the source code of this software including any changes.

Axon Digital Design shall provide the source code on request either through physical distribution or electronic communication. For physical distribution you may be charged a fee that covers distribution costs. This offer is valid up to three years after date of purchase. Please direct your request to the support department of Axon Digital Design.

Axon Digital Design supports open-source software by participating in the development of open-source projects or submitting improvements to these projects. For more information see http://opensource.axon.tv/

GNU Public License version 2

TERMS AND CONDITIONS FOR COPYING, DISTRIBUTION AND MODIFICATION

0. This License applies to any program or other work which contains a notice placed by the copyright holder saying it may be distributed under the terms of this General Public License. The “Program”, below, refers to any such program or work, and a “work based on the Program” means either the Program or any derivative work under copyright law: that is to say, a work containing the Program or a portion of it, either verbatim or with modifi cations and/or translated into another language. (Hereinafter, translation is included without limitation in the term “modifi cation”.) Each licensee is addressed as “you”.

Activities other than copying, distribution and modifi cation are not covered by this License; they are outside its scope. The act of running the Program is not restricted, and the output from the Program is covered only if its contents constitute a work based on the Program (independent of having been made by running the Program). Whether that is true depends on what the Program does.

1. You may copy and distribute verbatim copies of the Program’s source code as you receive it, in any medium, provided that you conspicuously and appropriately publish on each copy an appropriate copyright notice and disclaimer of warranty; keep intact all the notices that refer to this License and to the absence of any warranty; and give any other recipients of the Program a copy of this License along with the Program.

You may charge a fee for the physical act of transferring a copy, and you may at your option offer warranty protection in exchange for a fee.

2. You may modify your copy or copies of the Program or any portion of it, thus forming a work based on the Program, and copy and distribute such modifications or work under the terms of Section 1 above, provided that you also meet all of these conditions:

a) You must cause the modified files to carry prominent notices stating that you changed the fi les and the date of any change.
b) You must cause any work that you distribute or publish, that in whole or in part contains or is derived from the Program or any part thereof, to be licensed as a whole at no charge to all third parties under the terms of this License.
c) If the modified program normally reads commands interactively when run, you must cause it, when started running for such interactive use in the most ordinary way, to print or display an announcement including an appropriate copyright notice and a notice that there is no warranty (or else, saying that you provide a warranty) and that users may redistribute the program under these conditions, and telling the user how to view a copy of this License. (Exception: if the Program itself is interactive but does not normally print such an announcement, your work based on the Program is not required to print an announcement.)

These requirements apply to the modified work as a whole. If identifiable sections of that work are not derived from the Program, and can be reasonably considered independent and separate works in themselves, then this License, and its terms, do not apply to those sections when you distribute them as separate works. But when you distribute the same sections as part of a whole which is a work based on the Program, the distribution of the whole must be on the terms of this License, whose permissions for other licensees extend to the entire whole, and thus to each and every part regardless of who wrote it.

Thus, it is not the intent of this section to claim rights or contest your rights to work written entirely by you; rather, the intent is to exercise the right to control the distribution of derivative or collective works based on the Program.

In addition, mere aggregation of another work not based on the Program with the Program (or with a work based on the Program) on a volume of a storage or distribution medium does not bring the other work under the scope of this License.

3. You may copy and distribute the Program (or a work based on it, under Section 2) in object code or executable form under the terms of Sections 1 and 2 above provided that you also do one of the following:

a) Accompany it with the complete corresponding machine-readable source code, which must be distributed under the terms of Sections 1 and 2 above on a medium customarily used for software interchange; or,
b) Accompany it with a written offer, valid for at least three years, to give any third party, for a charge no more than your cost of physically performing source distribution, a complete machine-readable copy of the corresponding source code, to be distributed under the terms of Sections 1 and 2 above on a medium customarily used for software interchange; or,

c) Accompany it with the information you received as to the offer to distribute corresponding source code. (This alternative is allowed only for noncommercial distribution and only if you received the program in objects code or executable form with such an offer, in accord with Subsection b above.)

The source code for a work means the preferred form of the work for making modifi cations to it. For an executable work, complete source code means all the source code for all modules it contains, plus any associated interface defi nition fi les, plus the scripts used to control compilation and installation of the executable. However, as a special exception, the source code distributed need not include anything that is normally distributed (in either source or binary form) with the major components (compiler, kernel, and so on) of the operating system on which the executable runs, unless that component itself accompanies the executable.

If distribution of executable or object code is made by offering access to copy from a designated place, then offering equivalent access to copy the source code from the same place counts as distribution of the source code, even though third parties are not compelled to copy the source along with the object code.

4. You may not copy, modify, sublicense, or distribute the Program except as expressly provided under this License. Any attempt otherwise to copy, modify, sublicense or distribute the Program is void, and will automatically terminate your rights under this License. However, parties who have received copies, or rights, from you under this License will not have their licenses terminated so long as such parties remain in full compliance.

5. You are not required to accept this License, since you have not signed it. However, nothing else grants you permission to modify or distribute the Program or its derivative works. These actions are prohibited by law if you do not accept this License. Therefore, by modifying or distributing the Program (or any work based on the Program), you indicate your acceptance of this License to do so, and all its terms and conditions for copying, distributing or modifying the Program or works based on it.

6. Each time you redistribute the Program (or any work based on the Program), the recipient automatically receives a license from the original licensor to copy, distribute or modify the Program subject to these terms and conditions. You may not impose any further restrictions on the recipients' exercise of the rights granted herein. You are not responsible for enforcing compliance by third parties to this License.

7. If, as a consequence of a court judgment or allegation of patent infringement or for any other reason (not limited to patent issues), conditions are imposed on you (whether by court order, agreement or otherwise) that contradict the conditions of this License, they do not excuse you from the conditions of this License. If you cannot distribute so as to satisfy simultaneously your obligations under this License and any other pertinent obligations, then as a consequence you may not distribute the Program at all. For example, if a patent license would not permit royalty-free redistribution of the Program by all those who receive copies directly or indirectly through you, then the only way you could satisfy both it and this License would be to refrain entirely from distribution of the Program.

If any portion of this section is held invalid or unenforceable under any particular circumstance, the balance of the section is intended to apply and the section as a whole is intended to apply in other circumstances.

It is not the purpose of this section to induce you to infringe any patents or other property right claims or to contest validity of any such claims; this section has the sole purpose of protecting the integrity of the free software distribution system, which is implemented by public license practices. Many people have made generous contributions to the wide range of software distributed through that system in reliance on consistent application of that system; it is up to the author/donor to decide if he or she is willing to distribute software through any other system and a licensee cannot impose that choice.

This section is intended to make thoroughly clear what is believed to be a consequence of the rest of this License.

8. If the distribution and/or use of the Program is restricted in certain countries either by patents or by copyrighted interfaces, the original copyright holder who places the Program under this License may add an explicit geographical distribution limitation excluding those countries, so that distribution is permitted only in or among countries not thus excluded. In such case, this License incorporates the limitation as if written in the body of this License.

9. The Free Software Foundation may publish revised and/or new versions of the General Public License from time to time. Such new versions will be similar in spirit to the present version, but may differ in detail to address new problems or concerns.

Each version is given a distinguishing version number. If the Program specifies a version number of this License which applies to it and "any later version", you have the option of following the terms and conditions either of that version or of any later version published by the Free Software Foundation. If the Program does not specify a version number of this License, you may choose any version ever published by the Free Software Foundation.

10. If you wish to incorporate parts of the Program into other free programs whose distribution conditions are different, write to the author to ask for permission. For software which is copyrighted by the Free Software Foundation, write to the Free Software Foundation; we sometimes make exceptions for this. Our decision will be guided by the two goals of preserving the free status of all derivatives of our free software and of promoting the sharing and reuse of software generally.

NO WARRANTY

11. BECAUSE THE PROGRAM IS LICENSED FREE OF CHARGE, THERE IS NO WARRANTY FOR THE PROGRAM, TO THE EXTENT PERMITTED BY APPLICABLE LAW. EXCEPT WHEN OTHERWISE STATED IN WRITING THE COPYRIGHT HOLDERS AND/OR OTHER PARTIES PROVIDE THE PROGRAM "AS IS" WITHOUT WARRANTY OF ANY KIND, EITHER EXPRESSED OR IMPLIED, INCLUDING, BUT NOT LIMITED TO, THE IMPLIED WARRANTIES OF MERCHANTABILITY AND FITNESS FOR A PARTICULAR PURPOSE. THE ENTIRE RISK AS TO THE QUALITY AND PERFORMANCE OF THE PROGRAM IS WITH YOU. SHOULD THE PROGRAM PROVE DEFECTIVE, YOU ASSUME THE COST OF ALL NECESSARY SERVICING, REPAIR OR CORRECTION.

12. IN NO EVENT UNLESS REQUIRED BY APPLICABLE LAW OR AGREED TO IN WRITING WILL ANY COPYRIGHT HOLDER, OR ANY OTHER PARTY WHO MAY MODIFY AND/OR REDISTRIBUTE THE PROGRAM AS PERMITTED ABOVE, BE LIABLE TO YOU FOR DAMAGES, INCLUDING ANY GENERAL, SPECIAL, INCIDENTAL OR CONSEQUENTIAL DAMAGES ARISING OUT OF THE USE OR INABILITY TO USE THE PROGRAM (INCLUDING BUT NOT LIMITED TO LOSS OF DATA OR DATA BEING RENDERED INACCURATE OR LOSSES SUSTAINED BY YOU OR THIRD PARTIES OR A FAILURE OF THE PROGRAM TO OPERATE WITH ANY OTHER PROGRAMS), EVEN IF SUCH HOLDER OR OTHER PARTY HAS BEEN ADVISED OF THE POSSIBILITY OF SUCH DAMAGES.

Contacting Axon costumer support

Our customer support is committed to solve every problem you might have all around the world. You can contact our customer support here:

E-mail: support@axon.tv
Internet: www.axon.tv

Head office:

Axon Digital Design B.V.
Lange Wagenstraat 55
5126 BB Gilze
The Netherlands

Phone: +31 161 850 450
Fax: +31 161 850 499
E-mail: info@axon.tv

UK office:

Axon Digital Design Ltd.
1 Forest Court
Oaklands Park
Wokingham, Berkshire
United Kingdom

Tel.: + 44 (0)118 973 8920
Fax: +44 (0) 118 973 8921
E-mail: info-uk@axon.tv

China office:

China Representative Office
Room 804, 2nd Department, No.1 Building
Beijing Image, No.115 Fucheng Road
Haidian District, 100036 Beijing, China

Tel.: +86 (0) 108 814 4199
Fax: +86 (0) 108 814 4199
E-mail: info-cn@axon.tv