INSTALLATION & CONFIGURATION MANUAL

MGU-MGG200

4K, 3GB/S, HD, SD SDI EIGHTFOLD MULTIVIEW BUILDING BLOCK

Copyright

Disclaimer

The information in this manual is furnished for informational use only and subject to change without notice. While every effort has been made to ensure that the information contained in this user manual is accurate, up-to-date and reliable, EVS Broadcast Equipment cannot be held responsible for inaccuracies or errors that may appear in this publication.

Improvement Requests

Your comments will help us improve the quality of the user documentation. Do not hesitate to send improvement requests, or report any error or inaccuracy on this user manual by e-mail to doc@evs.com.

Regional Contacts

The address and phone number of the EVS headquarters are usually mentioned in the **Help > About** menu in the user interface.

You will find the full list of addresses and phone numbers of local offices either at the end of this user manual (for manuals on hardware products) or on the EVS website on the following page: http://www.evs.com/contacts.

User Manuals on EVS Website

The latest version of Media Infrastructure manuals are available at: https://mi-sftp.evs.com/
The user manuals for other EVS products can be found at the EVS download center, on the following webpage: https://www.evs.com/en/download-area.

WARNING: TO REDUCE THE RISK OF FIRE OR ELECTRICAL SHOCK, DO NOT EXPOSE THIS APPLIANCE TO RAIN OR MOISTURE

● ALWAYS disconnect your entire system from the AC mains before cleaning any component. The product frame (SFR18 or SFR04) must be terminated with three-conductor AC mains power cord that includes an earth ground connection. To prevent shock hazard, all three connections must always be used.
● NEVER use flammable or combustible chemicals for cleaning components.
● NEVER operate this product if any cover is removed.
● NEVER wet the inside of this product with any liquid.
● NEVER pour or spill liquids directly onto this unit.
● NEVER block airflow through ventilation slots.
● NEVER bypass any fuse.
● NEVER replace any fuse with a value or type other than those specified.
● NEVER attempt to repair this product. If a problem occurs, contact your local EVS distributor.
● NEVER expose this product to extremely high or low temperatures.
● NEVER operate this product in an explosive atmosphere.

Warranty: EVS warrants their products according to the warranty policy as described in the general terms. That means that 2021 EVS Broadcast Equipment SA can only warrant the products as long as the serial numbers are not removed.

Date created: 27-09-2017
Date last revised: 27-09-2017

This product complies with the requirements of the product family standards for audio, video, audio-visual entertainment lighting control apparatus for professional use as mentioned below.

EN60950	Safety
EN55103-1: 1996	Emission
EN55103-2: 1996	Immunity

EVS Broadcast Equipment MGU200 / MGG200 Tested To Comply With FCC Standards FOR HOME OR OFFICE USE	This device complies with part 15 of the FCC Rules Operation is subject to the following two conditions: (1) This device may cause harmful interference, and (2) This device must accept any interference received, including interference that may cause undesired operation.

Table of Contents

1 Introduction to Synapse

An Introduction to Synapse

Synapse is a modular system designed for the broadcast industry. High density, intuitive operation and high quality processing are key features of this system. Synapse offers a full range of converters and processing modules. Please visit the EVS website at http://www.evs.com/ to obtain the latest information on our new products and updates.

Local Control Panel

The local control panel gives access to all adjustable parameters and provides status information for any of the cards in the Synapse frame, including the Synapse rack controller. The local control panel is also used to back-up and restore card settings. Please refer to the rack controller manuals for a detailed description of the local control panel, the way to set-up remote control over IP and for frame related settings and status information.

Remote Control Capabilities

The remote control options are explained in the rack controller (RRC, RRS, ERC or ERS) manual. The method of connecting to a computer using Ethernet is also described in these manuals.

!

CHECK-OUT: "EVS CORTEX" SOFTWARE WILL INCREASE SYSTEM FLEXIBILITY OF ONE OR MORE SYNAPSE FRAMES

Although not required to use EVS Cortex with a Synapse frame, you are strongly advised to use a remote personal computer or laptop PC with EVS Cortex installed as this increases the ease of use and understanding of the modules. Especially with the MGG200 we strongly advise you to use EVS Cortex, as it can be very hard to set up a multiview without the EVS Cortex multiview GUI.

2 Unpacking and Placement

Unpacking

The EVS Synapse card must be unpacked in an anti-static environment. Care must be taken NOT to touch components on the card – always handle the card carefully by the edges. The card must be stored and shipped in anti-static packaging. Ensuring that these precautions are followed will prevent premature failure from components mounted on the board.

Placing the card

The Synapse card can be placed vertically in an SFR18 frame or horizontally in an SFR04 or SFR08 frame. Locate the two guide slots to be used, slide in the mounted circuit board, and push it firmly to locate the connectors.

Correct insertion of card is essential as a card that is not located properly may show valid indicators but does not function correctly.

Power consumption

The power consumption is higher than usual, because of the high-performance chips on the board. It is therefore highly recommended NOT to use the maximum storage capability of the SFR18 frames which are equipped with SMP80 power supplies. When your frame is equipped with an SMP80, house a maximum of 12x MGG or MGU cards.

3 A Quick Start

When powering-up

On powering up the Synapse frame, the card set will use basic data and default initialisation settings. All LED's will light during this process. After initialisation, several LED's will remain lit – the exact number and configuration is dependent upon the number of inputs connected and the status of the inputs.

Default settings

In its default condition, the MGU200 will act as dual head eightfold split. The auto format detection will recognize the input format. The SDI outputs are set to four-wire 4k resolution with a frame rate of 60 Hz.

Changing settings and parameters

The front panel controls or EVS Cortex Software can be used to change settings. An overview of the settings can be found in chapter 5, 6 and 7 of this manual.

Front Panel Control

Front Panel Display and Cursor

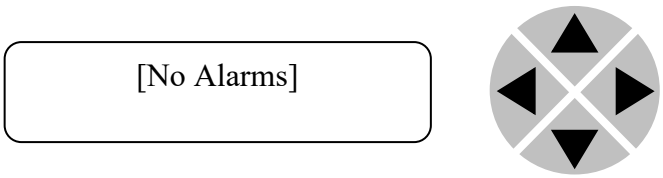

Settings are displayed and changed as follows:

Use the cursor 'arrows' on the front panel to select the menu and parameter to be displayed and/or changed.

Press ►	To go forward through the menu structure.
Press ◄	To go back through the menu structure.
Press ▲	To move up within a menu or increase the value of a parameter.
Press ▼	To move down through a menu or decrease the value of a parameter.

REMARK: Whilst editing a setting, pressing ► twice will reset the value to its default.

Example of changing parameters using front panel control

With the display as shown below

RRC18 [Select Card]
>S01=SFS10

Pressing the ► selects the SFS10 in frame slot 01.

The display changes to indicate that the SFS10 has been selected. In this example the Settings menu item is indicated.

SFS10 [Select Menu]
>Settings

Pressing the ► selects the menu item shown, in this example Settings.

(Pressing ▲ or ▼ will change to a different menu eg Status, Events).

The display changes to indicate that the SFS10 Settings menu item HD-Format has been selected and shows that it current setting is Auto.

SFS10 [Settings]
>HD-Format=Auto

Pressing the ► selects the settings item shown, in this example HD-Format.

(Pressing ▲ or ▼ will change to a different setting, e.g. Mode, H-Delay).

The display changes to indicate that the SFS10 Edit Setting menu item HD-Format has been selected.

SFS10 [Edit setting]
SDI-Format>Auto

To edit the setting of the menu item press ▲ or ▼.

All menu items can be monitored and/or changed in this way. Changing a setting has an immediate effect.

EVS Cortex Software

EVS Cortex Software can be used to change the settings of Synapse modules from a PC, either locally or remotely. The software enables communication based on TCP/IP between the setup PC and Synapse frames/modules.

Each Synapse frame is addressed through its rack controller's unique IP address, giving access to each module, its menus and adjustment items. EVS Cortex has access to data contained within the Synapse module and displays it on a GUI. The software has an intuitive structure following that of the module that it is controlling.

To download EVS Cortex, please refer to our website: http://www.evs.com/. For instruction about how to use EVS Cortex, please check the EVS Cortex help files for details (press F1 in any window)

Menu Structure Example

Slot	Module		Item		Parameter		Setting
▲							
▲							
S02			Identity				
▲			▲				
S01	SFS10	►	Settings	►	SDI-Format	►	Auto
▼			▼		▼		▼
S00	RRC18		Status		Mode		625
			▼		▼		▼
			Events		Ref-Input		525
					▼		
					H-Delay		
					▼		
					▼		

Note Further information about Front Panel Control and Synapse Cortex can be obtained from the RRC, RRS, ERC and ERS operational manuals and the Cortex help files

4 The MGU-MGG200 Card

Introduction

SynView is EVS's next generation Synapse modular multi-viewer. The feature-set has been increased tremendously with double the number of inputs and up to 8 times the amount of outputs (heads) UHD/4K/60Hz output resolution on display outputs and a 6-fold increase of processing power.

The system consists of 4 basic models. These versions can be mixed and matched to build multiviewer with up to hundreds of inputs and 8 1080p heads (on SDI) or two heads with UHD/4K resolution.
Multiple connector panels will be available to allow for different I/O configurations.

There are currently 4 models defined below their differences:

differentiation / Model name / Application	SDI IN	SDI OUT	IP inputs	IP outputs	PIP	monitoring
MGU200 Production SDI inputs	8	8	-	-	16	basic
MGG200 Production SDI inputs	8	2	-	-	16	basic
MGU100 Monitoring SDI inputs	8	8	-	-	8	extensive
MGG100 Monitoring SDI inputs	8	2	-	-	8	extensive

The above cards have the same output configuration with up to dual head UHD/4k on dual quad 3Gb/s SDI (with a 5V powered quad SDI to HDMI converter), or 8 heads on SDI.
The cards can be combined in any combination up to 12 cards in the new SFR18 gen3 with the new SMP175 power supply.

Because of the external Daisy Chain mini-SAS-HD connector you can build a multi viewer with in theory an unlimited amount of input channels as you can chain the cards even between frames

Like with the original SynView system you can split the multiviewer into smaller chunks of cards.
A MGU200 can also be used stand alone as a dual quadsplit (or even octsplit) with 8 1080p pictures spread over 2 UHD screens (pixel mapping with no scaling).

Features

- 8 inputs to two individual panel outputs or 8 SDI (1080p) outputs [MGU200]
- 8 inputs to two individual panel outputs or 2 SDI (1080p) outputs [MGG200]
- Each input can be displayed on each head with individual scale and position.
- Low latency (20 ms for 50Hz, 17 ms for 59.94Hz)
- Full RGB domain (internal 20bit processing for scaling)
- Up to 2x 4k/UHD (2160p60) resolution on dual quad SDI (with use of a quad SDI to HDMI converter) on the MGU200
- Up to 8 3Gb/s SDI outputs
- Full variable scaling and positioning for all individual inputs.
- All inputs compatible with (mixing is allowed with different frame rates):
  - 1080p 50 and 59.94
  - 1080i and 720p 50 and 59.94 Hz
  - 1080p (sf) and 720p 29.97/25/24
  - SD 625 and 525
- 64 audio bars free assignable from 128 embedded sources and/or 32 sources via the Quad Speed Audio bus
- Three assignable regions in or under monitor: Input format, Static UMD and Dynamic UMD, VITC, ATC
- Lock to input, reference, or free running
- Audio metering
  - Up to 32 Bar-graphs per head [MGx200]
  - Masked or transparent bar-graphs
  - AES/EBU, BBC and Nordic scales
  - Customizable color schemes for audio meters
- Two definable clocks per head
  - Analog
  - Digital
  - Combined
- Two Clocks can be assigned to VITC, ATC, LTC, SNTP (Ethernet) or system
- UMD colors: white, green, red and amber
- Border, UMD and tally brightness adjustment
- Safe area markers
- Automatic 4:3 and 16:9 modes through VI or WSS triggers (SD-SDI inputs)
- GPI control for Aspect ratio, Full screen or quad mode and Tally
- Locks to Bi-level, Tri-level syncs or SDI input
- Full control and status monitoring through the front panel of the SFR04/SFR08/SFR18 frame and the Ethernet port (ACP)

Position of the inputs on output

Default positions on the inputs on the head:

- Input 1 = Top left
- Input 2 = Top
- Input 3 = Top
- Input 4 = Top right
- Input 5 = Bottom left
- Input 6 = Bottom
- Input 7 = Bottom
- Input 8 = Bottom right

GPI Contacts

With the local GPI contacts, you can control (in settings) the following objects:

- Full screen or eight-split
- Tally and Border indication.
- Counter

See chapter 10 for the connections.

Updating the card

This card has an unconventional way of updating with new or other firmware. How this is done can be read in the 'How to update Linux based cards' chapter in the Synapse card upgrade manual. It is downloadable on the EVS website.

5 Settings Menu

	OUTPUT
Lock-Mode	The MGG200 can be locked to a reference (in the SFR18 and SFR08, there are 2 reference inputs. `Ref1` = top input. `Ref 2` = bottom input), to an input or to its own oscillator. Lock-Mode determines how the card is locked. Options are `Ref1`, `Ref2` and `SDI1`. If `SDI1` is selected, the card will lock to the first input. Default setting is `Ref1`. **Note:** To prevent picture "hopping" on the multiview output, make sure that the input (or the card) is locked to a reference.
Out-FrmtA	The `Out-FrmtA` menu item sets the output resolution as present at the SDI output connector 1 to 4. The selectable resolutions are (Default setting is 2160p50): ▪ `2160p50` ▪ `1080p60` ▪ `2160p60` ▪ `1080i50` ▪ `1080p50` ▪ `1080i60` For the MGG200 the resolution table is slightly different. The `Out-FrmtA` menu item sets the output resolution as present at the SDI output connector 1. SDI output connectors 2 to 4 are a copy of connector 1. The selectable resolutions are (Default setting is 1080p50): ▪ `1080p50` ▪ `1080i50` ▪ `1080p60` ▪ `1080i60` **Note:** vertical refresh rate of the display has to be 50 or 60 Hz. The card can use either 50 or 60 Hz monitors (continental of US) independent of the inputs.
Output_Map_A	The `Output_Map_A` menu item sets the output in 3G mapping ▪ `Level-A` ▪ `Level-B-DL`
4K_Map_A	In 4K/UHD output mode the system can be setup in two output modes. This will be `4Ch_4Quadrants` or `4Ch_SI`. The default setting is `4Ch_4Quadrants`.

Out-FrmtB

The `Out-FrmtB` menu item sets the output resolution as present at the SDI output connector 5 to 8.
The selectable resolutions are (Default setting is 2160p50):

- `2160p50`
- `2160p60`
- `1080p50`
- `1080p60`
- `1080i50`
- `1080i60`

For the MGG200 the resolution table is slightly different. The `Out-FrmtB` menu item sets the output resolution as present at the SDI output connector 5. SDI output connectors 6 to 8 are a copy of connector 5.
The selectable resolutions are (Default setting is 1080p50):

- `1080p50`
- `1080p60`
- `1080i50`
- `1080i60`

Note: vertical refresh rate of the display has to be 50 or 60 Hz. The card can use either 50 or 60 Hz monitors (continental of US) independent of the inputs.

Output_Map_B

The `Output_Map_B` menu item sets the output in 3G mapping

- `Level-A`
- `Level-B-DL`

4K_Map_B

In 4K/UHD output mode the system can be setup in two output modes. This will be `4Ch_4Quadrants` or `4Ch_SI`. The default setting is `4Ch_4Quadrants`.

Daisy-HeadA/B

With this setting, you can set how the card is functioning in a multiview setup. You can set the card to `In-Only` to only receive Video over the bus from other cards and not output any signals to the bus (last card in the multiview card chain). When set to `Out-Only` the card will only output its signal to the bus and not accept Video from the bus (first card in the multiview chain). When set to `In-Out` the card will both accept Video input from the bus as well as output its signals to the bus (cards in the middle of a multiview chain). `Disable` will set the card to work on its own (=Default setting)

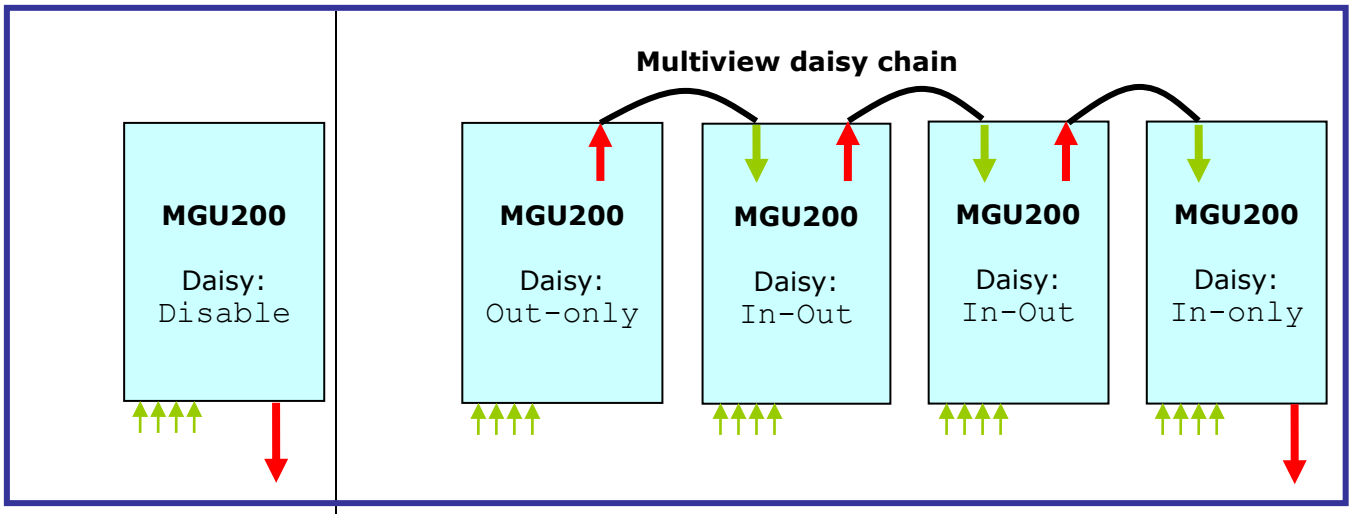

Layout-HeadA/B

With this setting you can choose between 8 different layout presets. These presets are stored on the MGX200 card. If more layout presets need to be stored, use Cortex. Adjusting the settings of these presets and changing this menu item to other presets will have direct effect on the output.
All menu items preceded with a '#' sign are possible to add to the selected preset. The presets are stored in memory. Default is `Preset_1`.

ScrLayout

With this setting, you can edit the 8 presets without the changes having any direct effect on the output (unless you are editing the preset, which is set as active layout). Adjusting the settings of these presets and changing this menu item to other presets will have no direct effect on the output.

You can use this option to change screen layout presets without these changes being visible directly on the output. Changes will only become visible when `ScrLayout-HeadA/B` are changed to the preset to just edit.

All menu items preceded with a #-sign are possible to add to the selected preset. The presets are stored in memory. Default is `Preset 1`.

LAYOUT

#Inp1_Source ~ #Inp8_ Source

With this setting you can switch the input source to any window. There is a choice for switching the window to `off` or to use `SDI-1 to SDI-8` as input. Switching an input `off` will disable the window of that input entirely. Default for window 1 is `SDI-1`, window 2 is `SDI-2` etc.

#Inp1_x ~ #Inp8_x

The `#Inp_x` setting sets the X coordinate of the top left corner of the window of the input. Settings are done with percentages (with 0.5% increments) of the total width of the screen.
Default for `#Inp1_x` is 0.5%
Default for `#Inp2_x` is 50.5%
Default for `#Inp3_x` is 0.5%
Default for `#Inp4_x` is 50.5%

#Inp1_y ~ #Inp8_y

The `#Inp_y` settings set the Y coordinate of the top left corner of the window of the input. Settings are done with percentages (with 0.5% increments) of the total heights of the screen.
Default for `#Inp1_y` is 0.5%
Default for `#Inp2_y` is 0.5%
Default for `#Inp3_y` is 50.5%
Default for `#Inp8_y` is 50.5%

#Inp1_w ~ #Inp8_w

The `#Inp_w` settings set the width of the window of the input. Settings are done with percentages (with 0.1% increments) of the total width of the screen. Default for all `#Inp_w` settings are 49.0%

#Inp1_h ~ #Inp8_h

The #Inp_h settings set the height of the window of the input. Settings are done with percentages (with 0.1% increments) of the total height of the screen. Default for all `#Inp_h` settings are 49.0%

#Inp1_BarStyle ~ #Inp8_BarStyle

These settings set the individual bar styles (UMD and Tally) of the input windows. It can be set to be displayed `Under` the window, `Over` the window. It can also be turned `off`. Default is `under`.

#Inp1_ShowUMD ~ #Inp8_ ShowUMD

Enables the under-monitor display to be visible or invisible. Choices are `Off` or `On`. Default this setting is `Off`.

#Inp1_ShowTal ~ #Inp8_ShowTal

With these items you can show or hide the Tallies. Switched `On`, they are displayed. Switched `Off`, they will not be displayed. Default is `On`.

#Inp1_Area1 ~ #Inp8_Area1

The xQW200/220 card can show up to 3 separate text fields under or in the separate windows (UMD). With these settings you can set what text should be in area1 of the UMD. Can be set to:

- `Disabled` (no area 1 UMD field)
- `Static UMD` (showing text as set in the corresponding Inp_UMDText setting)
- `Dynamic UMD` (shows dynamic UMD text as set in the control settings)
- `Video Format` (showing the input format of that window)
- `Timecode`(shows timecode in UMD)
- `VITC`
- `ATC`
- `Aspect Ratio`(shows incoming aspect ratio data)

Default for Area1 is `Static UMD`.

#Inp1_Area2 ~ #Inp8_Area2

With these settings you can set what text should be in Area 2 of the UMD. Can be set to:

- `Disabled`
- `Static UMD`
- `Dynamic UMD`
- `Video Format`
- `Timecode`
- `VITC`
- `ATC`
- `Aspect Ratio`

Default for Area2 is `Disabled`.

#Inp1_Area3 ~ #Inp8_Area3

With these settings you can set what text should be in Area 3 of the UMD. Can be set to:

- `Disabled`
- `Static UMD`
- `Dynamic UMD`
- `Video Format`
- `Timecode`
- `VITC`
- `ATC`
- `Aspect Ratio`

Default for Area3 is `Disabled`.

#Inp1_fill ~ #Inp8_fill

The #Inp_fill settings will let you set how the window will be filled with the input. It can be set to `Fit` (respecting the input aspect ratio and using the maximum available width or heights to show the complete picture, the rest is blacked), `Zoom` (zooming in the picture with respect to the aspect ratio, causing cut off on the sides), `Anamorphic` (filling the entire window with the picture causing anamorphic view when Aspect ratio of the input is not the same as the aspect ratio of the window) or `Raw` (Bypassing all scalers, used to evaluate the influence of the scalers).

Default for all #Inp_fill settings is `Fit`.

#Inp1_SD_AR ~ #Inp8_SD_AR

This setting sets the Aspect Ratio of the input when this input is SD. It can be set to the following options:

- `12F12` (4:3 source Full screen on 4:3 receiver)(default)
- `16L12` (16:9 source as letterbox on 4:3 receiver)
- `16F16` (16:9 source Full screen on 16:9 receiver)
- `12P16` (4:3 source as pillar-box on 16:9 receiver)
- `VI` (use Video Index aspect ratio)
- `WSS` (use Widescreen Signaling aspect ratio)

Note: The card only reacts to WSS signals if `#Inp_fill` is set to `fit`.

#Inp1_MtrDisplay ~ #Inp4_ MtrDisplay

With this setting, you can select the style of the audiometer bars for each individual input. You can choose between

- `L/R2` (Stereo channel at Left/Right side of Window)
- `L/R4` (2 Stereo channels at Left/Right side of Window)
- `2+2` (Stereo channel at Left and Right side of Window)
- `L/R5.1` (5.1 channel at Left/Right side of Window)
- `L/R8` (4 Stereo channels at Left/Right side of Window)
- `4+4` (2 Stereo channels at Left and Right side of Window)
- `L/R16` (8 Stereo channels at Left/Right side of Window)
- `8+8` (4 Stereo channels at Left/Right side of Window)
- `L/R5.1+2` (5.1 plus Stereo channel at Left/Right side of Window)

#Inp1_MtrPos ~ #Inp8_MtrPos

With these settings, you can select a position for the audio meter bars. For now, it is only possible to set them `Over` the picture. You can also turn them `Off`. By default, it is set to `over`.

#UMD_BarSize

Sets the height of the UMD regions below the windows. This can be adjusted in a percentage of the output resolution. The size can be set from `0.5%` to a maximum of `15%` of the output resolution. Default is `3%`.

#Clk_x ~ #Clk2_x

This sets the vertical position of the first onscreen graphical clock. Can range from 0% (top) to 100% (bottom) of the total screen height. By default, it is set to 0%.

#Clk_y ~ #Clk2_y

This sets the horizontal position of the first onscreen graphical clock. Can range from 0% (top) to 100% (bottom) of the total screen width. By default, it is set to 0%.

#Clk_w ~ #Clk_w

Sets the first onscreen clock width. Can be set from 2,5% to 100%. Note that the Clock will always be forced completely round. So, when `Clk_h` is set smaller then `Clk_w`, `Clk_w` will be adjusted to the same value as `Clk_h`. Default is `10%`.

#Clk_h ~ #Clk2_h

Sets the first onscreen clock height. Can be set from 2,5% to 100%. Note that the Clock will always be forced completely round. So, when `Clk_w` is set smaller then `Clk_h`, `Clk_h` will be adjusted to the same value as `Clk_w`. Default is 10%.

#Clk_style ~ #Clk2_style

This sets the graphical style of the first onscreen clock. Available styles are: `Analog`, `digital` or `combined` (analog clock with digital clock in its background). Set to `Off` will turn off the onscreen clock. Default is `off`.

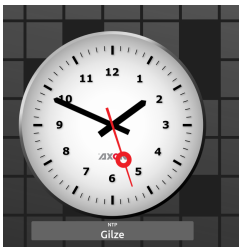

Analog

Digital

#Clk_source ~ #Clk2_source

This sets the time source of the first onscreen clock. Can be the VITC or the ATC of input 1 to input 8. It can also be set to `System`, in which case the clock will show the card's internal clock (uptime). The Multi view card also has two LTC inputs, physically available on the Dsub connector on the backplane. You choose between `LTC1` and `LTC2` input.

It is possible to synchronize the internal clock to an NTP server. This way, with `#Clk_source` set to `NTP`, the clock will be indicating the correct NTP time as set with the settings `NTPServer` and `Timezone` further down the settings menu. By default, it is set to `System`.

#Clk_Source_Inp ~ #Clk2_Source_Inp

When Timecode is going to be used from SDI, the user needs to assign which input this needs to be. This is a choice between `SDI-1` to `SDI-8`. The default setting is `SDI-1`.

#Clk_Text ~ #Clk2_Text

Sets text which is visible underneath the first clock. Can contain a maximum of 32 characters.

NOTEPAD

Inside the SynView multi viewer we have the option to use a Notepad on screen to put notes on.

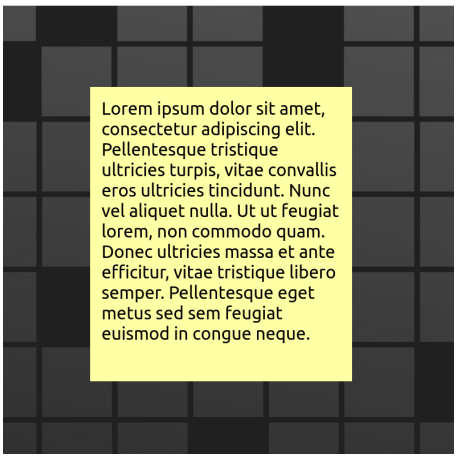

#Note_Style

This enables the user to make the notepad visible or invisible. This setting needs to be `On` to be visible or `Off` to be invisible. Default is `Off`.

Note_Ln1 ~ Note_Ln12

These settings form the notepad. Eleven lines of random text can be inserted in these settings. Best used in combination with EVS Cortex or Cerebrum.

#Note_x

This sets the vertical position of the first onscreen Notepad. Can range from 0% (top) to 100% (bottom) of the total screen height. By default, it is set to 0%.

#Note_y

This sets the horizontal position of the first onscreen Notepad. Can range from 0% (top) to 100% (bottom) of the total screen width. By default, it is set to 0%.

#Note_w

Sets the first onscreen clock width. Can be set from 2,5% to 100%. Note that the Clock will always be forced completely round. So, when `Note _h` is set smaller then `Note_w`, `Note_w` will be adjusted to the same value as `Note_h`. Default is `10%`.

#Note_h

Sets the first onscreen clock height. Can be set from 2,5% to 100%. Note that the Clock will always be forced completely round. So, when `Note_w` is set smaller then `Note_h`, `C Note_h` will be adjusted to the same value as `Note_w`. Default is 10%.

Tally & under monitor display (UMD) Color Settings

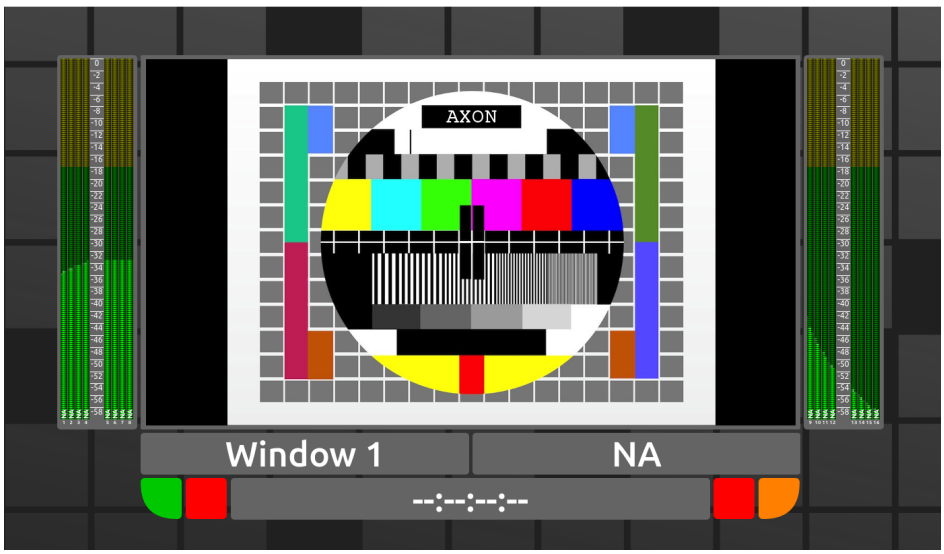

Inp1_Tal_l1 ~ Inp8_Tal_l1

The SynView Multiviewer cards have four tallies. Two on the left and two on the right. These settings change the colour of the left most Tally of the

inputs 1 to 8. Possible colours are `Green`, `Red`, `Gray or Amber`. Default for all inputs is `Gray`.

Inp1_Tal_l2 ~ Inp8_Tal_l2

The SynView Multiviewer cards have four tallies. Two on the left and two on the right. These settings change the colour of the second left Tally of the inputs 1 to 8. Possible colours are `Green`, `Red`, `Gray or Amber`. Default for all inputs is `Gray`.

Inp1_Tal_r1 ~ Inp8_Tal_r1

The SynView Multiviewer cards have four tallies. Two on the left and two on the right. These settings change the colour of the first right Tally of the inputs 1 to 8. Possible colours are `Green`, `Red`, `Gray or Amber`. Default for all inputs is `Gray`.

Inp1_Tal_r2 ~ Inp8_Tal_r2

The SynView Multiviewer cards have four tallies. Two on the left and two on the right. These settings change the colour of the Right most Tally of the inputs 1 to 8. Possible colours are `Green`, `Red`, `Gray or Amber`.

Default for all inputs is `Gray`.

Inp1_Border~ Inp8_Border

With Border you can set the color of the Border of each input. Can be set to `Gray`, `Green`, `Red`, `Amber`, `Off` (no bars, just text) or set to follow the color of the left tally (`Follow_tal_l1/l2`) or the right tally (`Follow_tal_r1/r2`). By default, it is set to `Gray`.

Inp1_UMDColor ~ Inp8_UMDColor

With UMDColor you can set the color of the UMD bars of each input. Can be set to `Gray`, `Green`, `Red`, `Amber`, `Off` (no bars, just text) or set to follow the color of the left tally (`Follow_tal_l1/l2`) or the right tally (`Follow_tal_r1/r2`). By default, it is set to `Gray`.

Inp1_UMDText ~ Inp8_UMDText

The text filled out in this setting is being shown when the option `#Inp1_Area1 ~ #Inp8_Area3` is set to show `Static UMD`. The default value is `Window 1` ~ `Window 8`.

TIMECODE SETTINGS

Inp1_VITC-Line ~ Inp4_VITC-Line

These settings let you select in which line the VITC time is located in each corresponding input. Can be any line between 7 and 22. Default is line 17.

EMBEDDER

The SynView multiview card is able to extract a stereo pair of audio per input. These 8 stereo pairs will then be combined to 16 again and these channels will be embedded in the first SDI output.

	Tally & under monitor display (UMD) Color Settings
CtrlMode	This setting selects the used protocol to select Tally and UMD `ACP menu`: Setting selected through menu `GPI`: setting via GPI `TSL`: Use the serial TSL protocol (v3.1) for tally/umd info `TSLv5`: Use TSLv5 protocol (see appendix) The TSL protocol will always work in 16-character mode.
TSL-Netw-Port	This is setting the port number where the multiviewer will listen to for the TSLv5 commands
TSLv5-ScreenNr	TSLv5 has the possibility to use device and window addressing. This setting is the device addressing. For each card, the user will need to put a different number in. The PIP's in the screen will then be numbered automatically from 1 to 16.
	Temperature monitoring
Monitor-Temp	This setting will show the temperature in the temperature monitor status. Default the setting is set to `Off`.
	NETWORK SETTINGS
IP_Conf0	With this setting you can let the card obtain an IP address automatically via `DHCP` or appoint a `manual` set IP address. Default is `Manual`.
mIP0	When `IP_Conf0` is set to `manual`, you can type in the preferred IP address here. By default, it is set to 172.16.1.2
mNM0	With `IP_Conf0` set to `manual`, with this setting you can set a Netmask. Default is 255.255.0.0
mGW0	With `IP_Conf0` set to `manual`, this setting let you set a Standard Gateway. Default is set to 172.16.0.1
NetwPrefix0	With `IP_Conf0` set to `manual`, this item lets you set a network mask prefix varying from 0 to 30 bit. the `mNM0` network mask changes accordingly.

mPri_DNS

Primary Domain name server to be used for resolving hostnames. Default IP address is `0.0.0.0`.

mSec_DNS

Secondary Domain name server to be used for resolving hostnames. Default IP address is `0.0.0.0`.

NTPServer

With this string, you can set an NTP server name or IP address to which the system clock should then synchronize. The NTP connection should be made via the Ethernet connection on the back panel. The default site is `pool.ntp.org`.

Timezone

This setting allows for setting the timezone for the multiviewer. This is a text-based entry field. In appendix you will find the table to choose from. Default the Multi viewer is setup to `Europe/Amsterdam`.

6 Extra features

Backgrounds

The SynView multi view system has also capabilities for displaying background graphics. Factory default, there will be an EVS background. For the user it is possible to put another picture on the board, which will be used as background. This picture will be scaled to the resolution set on the output.

The location of these logos can be found on the first card of the multiview system. To access this, you need to connect to the card with FTP or WebDav. When the IP address of the 1G port is being accessed with one of the protocols mentioned, three folders are found. Background_A, Background_B and Fonts.

When a picture, with the .png format will be dropped into one of the background directories, the card automatically will use the picture for the one of the backgrounds.

Fonts

The SynView multi view system has also capabilities for displaying different fonts. Factory default, there will be an EVS which is used. For the user it is possible to put another font on the board, which will be used as font for all text displayed.

The location of this font can be found on all cards of the multiview system. To access this, you need to connect to the card with FTP or WebDav. When the IP address of the 1G port is being accessed with one of the protocols mentioned, three folders are found. Background_A, Background_B and Fonts.

When a font, with the .ttf or .otf format will be dropped into the font directory, the card needs to be restarted to use this.

7 Status Menu

Introduction

The status menu indicates the status of each item listed below.

Ref-Format

This status item indicates the presence and format reference in applied to the system. This is displayed as:

- NA
- 1080p60
- 1080p50
- 1080i60
- 1080i50
- 1080p30
- 1080p25
- 1080p24
- 1035i60
- 720p60
- 720p50
- 720p30
- 720p25
- 720p24
- SD525
- SD625

sInp1 ~ sInp8

This status item indicates the presence and format of a valid signal in input 1 till input 8. This is displayed as:

- NA
- 2160p50
- 2160p60
- 1080p60
- 1080p50
- 1080i60
- 1080i50
- 1080p30
- 1080p25
- 1080p24
- 1035i60
- 720p60
- 720p50
- 720p30
- 720p25
- 720p24
- SD525
- SD625

sInp1-Map ~ sInp8-Map

This status shows in case of 3Gb.s signal what the mapping of the signal is.

- NA
- Level-B-DS
- Level-B-DL
- Level-B-DSSC
- Level-A
- PsF
- 720p24

SD525

sInp1_VI ~ sInp8_VI

This status shows the Aspect Ratio of the inputs when this input is SD. It can have to the following values:

- 4:3_0 to 16:9_7
- And NA when no VI is there.

sInp1_WSS-Stnd ~ sInp8_ WSS-Stnd

This status shows the Aspect Ratio of the inputs when this input is SD. It can have to the following values:

- 1_vid to 8_flm
- And NA when no WSS-Stnd is there.

sInp1_WSS-Extd ~ sInp8_ WSS-Extd

This status shows the Aspect Ratio of the inputs when this input is SD. It can have to the following values:

- 4:3_0 to 16:9_7
- And NA when no WSS-Extd is there.

sInp1_s2016 ~ sInp8_s2016

Displays the current value of the SMPTE2016 data of the corresponding input (also known as AFD). Can be any AFD value between AFD1 and AFD16. That or NA (no AFD found)

sInp1_CRC_EDH ~ sInp8_CRC_EDH

Displays if the signal is okay or has CRC or EDH errors.

VITC-Presence

Displays which inputs contain VITC data. This is displayed as _____ when none of the inputs contain VITC, 1234 if all inputs contain VITC and for instance _2_4 when inputs 2 and 4 contain VITC and input 1 and 3 do not.

ATC-Presence

Displays which inputs contain ATC data. This is displayed as _____ when none of the inputs contain ATC, 1234 if all inputs contain ATC and for instance _2_4 when inputs 2 and 4 contain ATC and input 1 and 3 do not.

LTC_Presence

Indicates if there is an LTC input present on the back panel. Only possible on the G-H-SQW220 models. Indicated as OK, NA (not available) or Error

	(wrong input data).
Ref	Indicates the status of the reference input. Can be `NA` or `present`.
GPI	This item displays the status of the GPI contacts.
sInp1_Tal_l1 ~ sInp16_Tal_l1	These items display the status of the left most tally of the input window. It can be `Green`, `Red`, `Amber` or `Off`.
sInp1_Tal_r1 ~ sInp16_Tal_r1	These items display the status of the first right tally of the input window. It can be `Green`, `Red`, `Amber` or `Off`.
sInp1_Tal_l2 ~ sInp16_Tal_l2	These items display the status of the left tally of the input window It can be `Green`, `Red`, `Amber` or `Off`.
sInp1_Tal_r2 ~ sInp16_Tal_r2	These items display the status of the right most tally of the input window It can be `Green`, `Red`, `Amber` or `Off`.
sInp1_Border ~ sInp16_Border	These items display the status of the input's window border colour. It can be `Green`, `Red`, `Amber` or `Off`.
sInp1_UMDText ~ sInp16_UMDText	These items display the status of the input's window UMD text. Can be a string with a maximum length of 17 characters.
sInp1_UMDText2 ~ sInp16_UMDText2	These items display the status of the input's window UMD text. Can be a string with a maximum length of 17 characters.
sInp1_UMDText3 ~ sInp16_UMDText3	These items display the status of the input's window UMD text. Can be a string with a maximum length of 17 characters.
sInp1_UMDColor~ sInp16_UMDColor	These items display the status of the input's window UMD color. It can be Green, Red, Amber or Off.
Head_A/B_Chain_ID	Tbd
Head_A/B_Chain_Num	Tbd
Head_A/B_DVI_HPD	Tbd
Head_A/B_Lock	Tbd
Daisy_A/B_in_Lock	Tbd

Head_A/B_Wordlock	tbd
Head_A/B_Daisy_Err	Tbd
Head_A/B_Irq_Stat	Tbd
Head_A/B_Prgm_Stat	Tbd
Head_A/B_Ctrl_Stat	Tbd
Head_A/B_If_Stat	Tbd
Head_A/B_ds64br401	Tbd
Head_A/B_Idt_I2C	Tbd
Head_A/B_Idt_Calc	Tbd
Head_A/B_LMH1983	Tbd
Head_A/B_If_reset	Tbd
	NETWORK STATUS
IP_Addr0	This item displays the status of the IP address. It can be manual, DHCP asking, DHCP Leased or DHCP Infin.
MAC0	This item displays the MAC address of the card.
IP0	This item displays the current IP address of the card.
NM0	This item displays the current Netmask of the card.
GW0	This item displays the current Standard Gateway of the card.

8 Events Menu

Introduction

An event is a special message that is generated on the card asynchronously. This means that it is not the response to a request to the card, but a spontaneous message.

What is the Goal of an event?

The goal of events is to inform the environment about a changing condition on the card. A message may be broadcast to mark the change in status. The message is volatile and cannot be retrieved from the system after it has been broadcast. There are several means by which the message can be filtered.

MGU-MGG200 Events

The events reported by the MGU-MGG200 are as follows;

Announcements

Announcements is not an event. This item is only used for switching the announcement of status changes on/off. 0=off, other =on

Input

Input can be selected between 0 .. 255. 0= no event, 1..255 is the priority setting.

Ref-Status

Ref-status can be selected between 0 .. 255. 0= no event, 1..255 is the priority setting

This information is only needed when the GPI16 card is used or when software is implemented.

What information is available in an event?

The message consists of the following items:

1) A message string to show what has happened in text, for example: “INP_LOSS”, “REF_LOSS”, “INP_RETURN”.
2) A tag that also shows what happens, but with a predefined number: e.g., 1 (= loss of input), 2 (= loss of reference), 129(= 1+128 = return of input). For a list of these predefined tags see the table on the next page.
3) A priority that marks the importance of an event. This value is defined by the user and can have any value between 1 and 255, or 0 when disabled.
4) A slot number of the source of this event.

The Message String

The message string is defined in the card and is therefore fixed. It may be used in controlling software like Synapse Set-up to show the event.

The Tag

The tag is also defined in the card. The tag has a fixed meaning. When controlling or monitoring software should make decisions based on events, it is easier to use the tag instead of interpreting a string. The first implementation is the tag-controlled switch in the GPI16.

In cases where the event marks a change to fault status (e.g., 1 for Loss of Input) the complement is marked by the tag increased by 128 (80_{hex}) (e.g., 129 (81_{hex}) for Return of Input).

Defining Tags

The tags defined for the MGU-MGG200 are:

Event Menu Item	Tag		Description
Announcements	0 or NA	0 or NA	Announcing of report and control values
Input	01_{hex}=INP_LOSS	81_{hex}=INP_RETURN	primary input lost or returned

The Priority

The priority is a user-defined value. The higher the priority of the alarm, the higher this value. Setting the priority to Zero disables the announcement of this alarm. Alarms with priorities equal or higher than the Error Threshold setting of the RRC will cause the error LED on the Synapse rack front panel to light.

The Address

Together with the message string or the tag, the slot number or address of the card is relevant to be able to assign the event to a certain card.

9 LED Indication

Error LED

The error LED indicates an error if the internal logic of the HQW200 card is not configured properly, or when there is a hardware failure.

Input_1 LED ~ Input_8 LED

These LED indicates the presence of a valid SDI (SD or HD) video input signal.

Connection LED

This LED illuminates after the card has initialized. The LED lights for 0.5 seconds each time a card is connected.

ANC LED

This LED indicates presence of ancillary data (like ATC timecode)

All LED's will illuminate several seconds during start-up.

10 Block Schematic

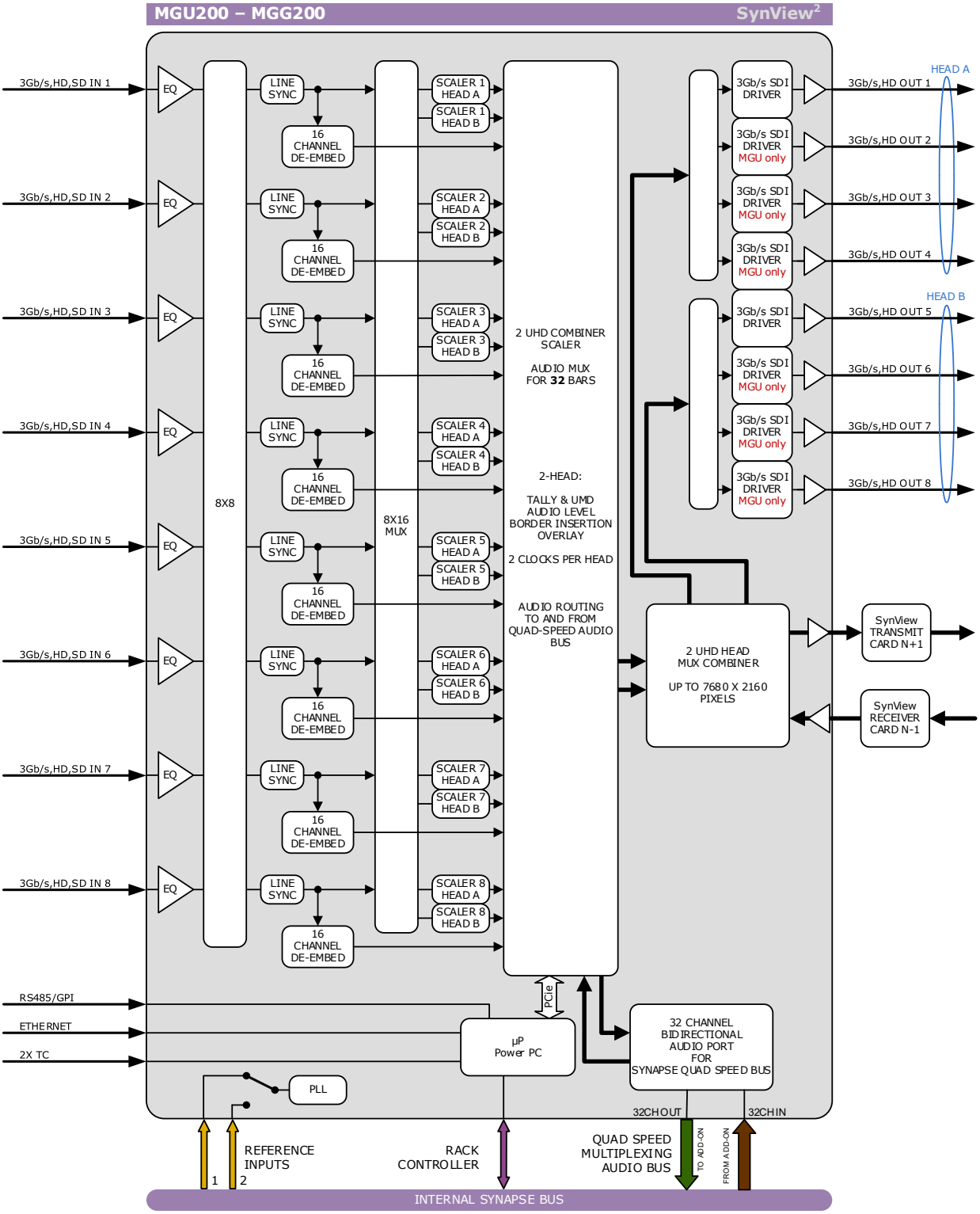

11 Connector Panel MGU200

The MGU200 can be used with the following backplanes:

BPH47

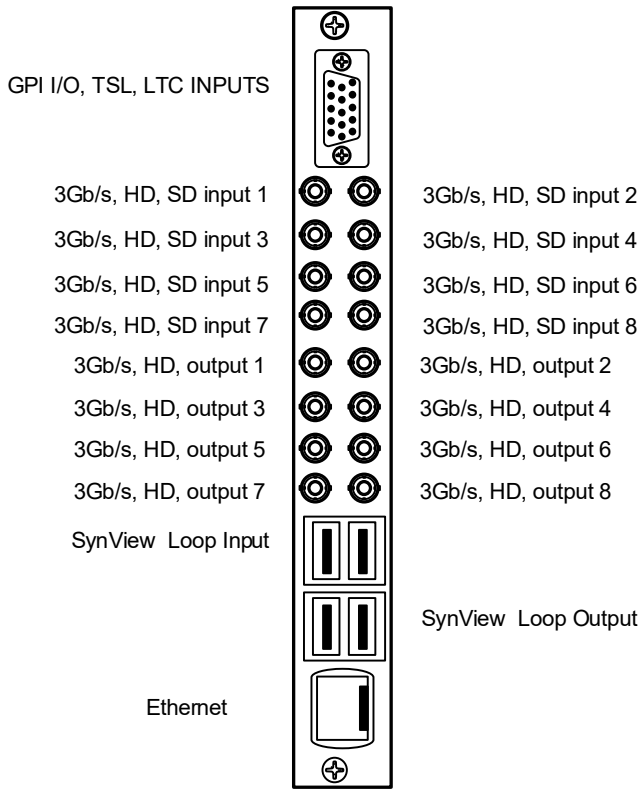

Note: GPI's work in a latching mode

Appendix 1: Supported protocols

ASCII

Electrical: RS232 (max 30 meters)
9.6 kbaud
8-bit
2 stop bits.
No parity, X-on/X-off

Commands:

Loading the display : ZDaanabcdefgh<cr>
ZD = command identification "display set"
aa = UMD address in HEX form as selected at the UMD
n = display number (1..n)
abcdefgh = characters for the display
<cr> = carriage return (end and sync character)

Setting the Tally LEDs : ZT aantt<cr>
ZT = command identification "Tally set"
aa = UMD address in HEX form as selected at the UMD
n = display number (1..n)
tt = TALLY led LEFT,RIGHT (0=off,1=on)
<cr> = carriage return (end and sync character)

Adjusting the brightness: ZBaanv<cr>
ZB = command identification "brightness set"
aa = UMD address in HEX form as selected at the UMD
n = display number (1..n)
v= "+" = lighter, "-" = darker
<cr> = carriage return (end and sync character)

Adjusting Display/Tally Color: ZLaaIIcc<cr>
ZL = command identification "display set"
aa = UMD address in HEX form as selected at the UMD
II = display number or tally led –number from left to right
00 1st Display
1 2nd Display
80 1st Tally LED
81 2ND Tally LED
82 3rd Tally LED
83 4th Tally LED

cc = Color-Code
00 Black
11 Green
21 Red
31 Amber

<cr> = carriage return (end and sync character)

Adjusting the display and tally brightness ZSaadbb<cr>

ZS = command identification "display and tally brightness"
aa = UMD address in HEX form as selected at the UMD
d = display
bb = Brightness (00..64 HEX notation
<cr> = carriage return (end and sync character)

TSLv3.1

This protocol sets out to define the method of communication between a TSL controller and peripheral devices on a multi-drop device bus. The protocol described is for one way communication only. It details physical layer, link layer and message structure.

Electrical:
RS 422/ RS 485
8 bit data
1 stop
even parity
38k4 baud

Dynamic UMD Protocol:

Header (1 byte) : Display address(0-126) + 80 hex
(control byte and display data will be sent)

Control (1 byte) : bit0 = tally1 (1=on, 0=off)
bit1 = tally2 (1=on, 0=off)
bit2 = tally3 (1=on, 0=off)
bit3 = tally4 (1=on, 0=off)
bit4-5 = brightness data
bit 4=0,bit 5=0 (0 brightness)
bit 4=0,bit 5=1 (1/7 brightness)
bit 4=1,bit 5=0 (1/2 brightness)
bit 4=1,bit 5=1 (full brightness)
bit 6 = reserved (clear to 0)
bit 7 = cleared to 0

Display Data (16bytes) = 16 displayable ASCII characters in the range 20 hex to 7E hex. All 16 characters must be sent.

Single Dynamic Displays
For 8 character displays only the first 8 characters of the display data are used, the remaining 8 are needed just for padding. Only tallies 1&2 are use for single displays.

Dual Dynamic Displays
Dual 8 character displays are treated as a single display of 16

characters, the first 8 characters for the left-hand side and the second 8 characters for the right-hand side. Tallies 1&2 are for the left display and tallies 3&4 for the right display.

Triple/Quad Dynamic Displays
These units take two addresses.
Address 1, for display 1, tally 1 & 2
Address 1 for display 2, tally 3 & 4
Address 2 for display 3, tally 5 & 6
Address 2 for display 4, tally 7 & 8

TSLv5

This protocol is a new 16 bit UMD protocol, with no reverse compatibility to previous TSL UMD protocols. The primary points for this protocol to provide over previous versions are as follows:

1. Display addressing up to 65,535 per screen
2. ASCII or Unicode character sets
3. Variable length mnemonics
4. IP based packet communication, with optional wrapper for stream based comms
5. Multiple display updates per packet

Physical Layer
Packets are sent via UDP. Maximum packet length is 2048 bytes. Optionally, the protocol can operate over TCP/IP, or any other byte stream interface, with the following wrapper scheme:
DLE is defined as 0xFE
STX is defined as 0x02

Packet start is delimited by the sequence DLE/STX.
Any occurrence of the DLE character in the packet is byte stuffed to DLE/DLE.
Any byte count fields in the packet are not affected by the byte stuffing.

Message Format
16-bit values are sent as little-endian, i.e. LSB/MSB.

The packet is defined as follows:
`PBC / VER / FLAGS / SCREEN / (<DMSG> ( / <DMSG>)…) or (SCONTROL)`

`PBC` (16 bit):
Total byte count of following packet

`VER` (8 bit):

Minor version number (e.g. V5.00, VER = 0). Note this byte can be used as versioning control for the following definitions. Whilst any future changes to this protocol will aim to be backward compatible, this is not guaranteed.

`FLAGS` (8bit):
Defined as follows:
Bit 0: Clear for ASCII based strings in packet, set for Unicode UTF-16LE
Bit 1: If set, data after SCREEN is screen control data (SCONTROL) – otherwise it's display message data (DMSG)
Bit 2-7: Reserved (clear to 0)

`SCREEN` (16 bit):
Primary index for use where each screen entity would have display indices (defined below) starting from 0.
Index 0xFFFF is reserved as a "Broadcast" to all screens.
If not used, set to 0.

Display Message (<DMSG>) Definition
This message definition is sent per display, and there can be several in a packet (up to max packet length). Constructed as follows:
`INDEX / CONTROL / (LENGTH / TEXT) or (CONTROL DATA)`

`INDEX` (16 bit):
The 0 based address of the display, up to 65534 (0xFFFE).
Address 0xFFFF is reserved as a "Broadcast" address to all displays.

`CONTROL` (16 bit):
Display control and tally data as follows:

Bit 0-1: RH Tally Lamp state
Bit 2-3: Text Tally state
Bit 4-5: LH Tally Lamp state
Bit 6-7: Brightness value (range 0-3)
Bit 8-14: Reserved (clear to 0)
Bit 15: Control Data: following data to be interpreted as Control data rather than Display data when set to 1.

2 Bit Tally values are:
0 = OFF, 1 = RED, 2 = GREEN, 3 = AMBER.

Display Data: (CONTROL bit 15 is cleared to 0)

`LENGTH` (16 bit):
Byte count of following text.

`TEXT`:
UMD text, format defined by FLAGS byte.

Control Data: (CONTROL bit 15 is set to 1)
Not defined in this version of protocol.

Screen control (SCONTROL) Definition (FLAGS bit 1 set to 1)
Not defined in this version of protocol.

Appendix 2: Timezones

Africa
Africa/Abidjan
Africa/Accra
Africa/Addis_Ababa
Africa/Algiers
Africa/Asmara
Africa/Asmera
Africa/Bamako
Africa/Bangui
Africa/Banjul
Africa/Bissau
Africa/Blantyre
Africa/Brazzaville
Africa/Bujumbura
Africa/Casablanca
Africa/Ceuta
Africa/Conakry
Africa/Dakar
Africa/Dar_es_Salaam
Africa/Djibouti
Africa/Douala
Africa/El_Aaiun
Africa/Freetown
Africa/Gaborone
Africa/Harare
Africa/Johannesburg
Africa/Juba
Africa/Kampala
Africa/Khartoum
Africa/Kigali
Africa/Kinshasa
Africa/Lagos
Africa/Libreville
Africa/Lome
Africa/Luanda
Africa/Lubumbashi
Africa/Lusaka
Africa/Malabo
Africa/Maputo
Africa/Maseru
Africa/Mbabane
Africa/Mogadishu
Africa/Monrovia
Africa/Nairobi
Africa/Ndjamena
Africa/Niamey
Africa/Nouakchott
Africa/Ouagadougou
Africa/Porto-Novo
Africa/Sao_Tome
Africa/Timbuktu
Africa/Tripoli
Africa/Tunis
Africa/Windhoek

America
America/Adak
America/Anguilla
America/Antigua
America/Araguaina
America/Argentina
America/Argentina/Buenos_Aires
America/Argentina/Catamarca
America/Argentina/ComodRivadavia
America/Argentina/Cordoba
America/Argentina/Jujuy
America/Argentina/La_Rioja
America/Argentina/Mendoza
America/Argentina/Rio_Gallegos
America/Argentina/Salta
America/Argentina/San_Juan
America/Argentina/San_Luis
America/Argentina/Tucuman
America/Argentina/Ushuaia
America/Aruba
America/Asuncion
America/Atikokan
America/Atka
America/Bahia
America/Bahia_Banderas
America/Barbados
America/Belem
America/Belize
America/Blanc-Sablon
America/Boa_Vista
America/Bogota
America/Boise
America/Buenos_Aires
America/Cambridge_Bay
America/Campo_Grande
America/Cancun
America/Catamarca
America/Cayenne
America/Cayman
America/Chihuahua
America/Coral_Harbour
America/Cordoba
America/Costa_Rica
America/Creston
America/Cuiaba
America/Curacao
America/Danmarkshavn
America/Dawson
America/Dawson_Creek
America/Detroit
America/Dominica
America/Edmonton
America/Eirunepe
America/El_Salvador
America/Ensenada
America/Fort_Nelson
America/Fort_Wayne
America/Fortaleza
America/Glace_Bay
America/Godthab
America/Goose_Bay
America/Grand_Turk
America/Grenada
America/Guadeloupe
America/Guatemala
America/Guayaquil
America/Guyana
America/Halifax
America/Havana
America/Hermosillo
America/Indiana
America/Indiana/Indianapolis
America/Indiana/Knox
America/Indiana/Marengo
America/Indiana/Petersburg
America/Indiana/Tell_City
America/Indiana/Vevay
America/Indiana/Vincennes
America/Indiana/Winamac
America/Indianapolis
America/Inuvik
America/Iqaluit
America/Jamaica
America/Jujuy
America/Juneau
America/Kentucky
America/Kentucky/Louisville
America/Kentucky/Monticello
America/Knox_IN
America/Kralendijk
America/La_Paz
America/Lima
America/Louisville
America/Lower_Princes
America/Maceio
America/Managua
America/Manaus
America/Marigot
America/Martinique
America/Matamoros
America/Mazatlan
America/Mendoza
America/Menominee
America/Merida
America/Metlakatla
America/Mexico_City
America/Miquelon
America/Moncton
America/Monterrey
America/Montevideo
America/Montreal
America/Montserrat
America/Nassau
America/Nipigon
America/Nome
America/Noronha
America/North_Dakota
America/North_Dakota/Beulah
America/North_Dakota/Center
America/North_Dakota/New_Salem
America/Ojinaga
America/Panama
America/Pangnirtung
America/Paramaribo
America/Phoenix
America/Port-au-Prince
America/Port_of_Spain
America/Porto_Acre
America/Porto_Velho
America/Puerto_Rico
America/Punta_Arenas
America/Rainy_River
America/Rankin_Inlet
America/Recife
America/Regina
America/Resolute
America/Rio_Branco
America/Rosario
America/Santa_Isabel
America/Santarem
America/Santiago
America/Santo_Domingo
America/Scoresbysund
America/Shiprock
America/Sitka
America/St_Barthelemy
America/St_Johns
America/St_Kitts
America/St_Lucia
America/St_Thomas
America/St_Vincent
America/Swift_Current
America/Tegucigalpa
America/Thule
America/Thunder_Bay
America/Tijuana
America/Toronto
America/Tortola
America/Vancouver
America/Virgin
America/Whitehorse
America/Winnipeg
America/Yakutat
America/Yellowknife

Antarctica
Antarctica/Casey
Antarctica/Davis
Antarctica/DumontDUrville
Antarctica/Macquarie
Antarctica/Mawson
Antarctica/McMurdo
Antarctica/Palmer
Antarctica/Rothera
Antarctica/South_Pole
Antarctica/Syowa
Antarctica/Troll
Antarctica/Vostok

Arctic
Arctic/Longyearbyen

Asia
Asia/Aden
Asia/Almaty
Asia/Amman
Asia/Anadyr
Asia/Aqtau
Asia/Aqtobe
Asia/Ashgabat
Asia/Ashkhabad
Asia/Atyrau
Asia/Baghdad
Asia/Bahrain
Asia/Baku
Asia/Bangkok
Asia/Barnaul
Asia/Beirut
Asia/Bishkek
Asia/Brunei
Asia/Calcutta
Asia/Chita
Asia/Choibalsan
Asia/Chongqing
Asia/Chungking
Asia/Colombo
Asia/Dacca
Asia/Damascus
Asia/Dili
Asia/Dushanbe
Asia/Famagusta
Asia/Gaza
Asia/Harbin
Asia/Hebron
Asia/Ho_Chi_Minh
Asia/Hovd
Asia/Irkutsk
Asia/Istanbul
Asia/Jakarta
Asia/Jayapura
Asia/Jerusalem
Asia/Kabul
Asia/Kamchatka
Asia/Kashgar
Asia/Kathmandu
Asia/Katmandu
Asia/Khandyga
Asia/Kolkata
Asia/Krasnoyarsk
Asia/Kuala_Lumpur
Asia/Kuching
Asia/Kuwait
Asia/Macao
Asia/Macau
Asia/Magadan
Asia/Makassar
Asia/Manila
Asia/Muscat
Asia/Nicosia
Asia/Novokuznetsk
Asia/Novosibirsk
Asia/Omsk
Asia/Oral
Asia/Phnom_Penh
Asia/Pontianak
Asia/Pyongyang
Asia/Qatar
Asia/Qyzylorda
Asia/Rangoon
Asia/Riyadh
Asia/Saigon
Asia/Sakhalin
Asia/Samarkand
Asia/Seoul
Asia/Shanghai
Asia/Singapore
Asia/Srednekolymsk
Asia/Taipei
Asia/Tashkent
Asia/Tbilisi
Asia/Tehran
Asia/Tel_Aviv
Asia/Thimbu
Asia/Thimphu
Asia/Tomsk
Asia/Ujung_Pandang
Asia/Ulaanbaatar
Asia/Ulan_Bator
Asia/Urumqi
Asia/Ust-Nera
Asia/Vientiane
Asia/Vladivostok
Asia/Yakutsk
Asia/Yangon
Asia/Yekaterinburg
Asia/Yerevan

Atlantic

Atlantic/Azores
Atlantic/Bermuda
Atlantic/Canary
Atlantic/Cape_Verde
Atlantic/Faeroe
Atlantic/Faroe
Atlantic/Jan_Mayen
Atlantic/Madeira
Atlantic/Reykjavik
Atlantic/South_Georgia
Atlantic/St_Helena
Atlantic/Stanley

Australia
Australia/ACT
Australia/Broken_Hill
Australia/Canberra
Australia/Currie
Australia/Eucla
Australia/Hobart
Australia/LHI
Australia/Lindeman
Australia/Lord_Howe
Australia/Melbourne
Australia/NSW
Australia/North
Australia/Perth
Australia/Queensland
Australia/South
Australia/Tasmania
Australia/Victoria
Australia/West
Australia/Yancowinna

Brazil
Brazil/Acre
Brazil/DeNoronha
Brazil/East
Brazil/West

Canada
Canada/Atlantic
Canada/Central
Canada/East-Saskatchewan
Canada/Eastern
Canada/Mountain
Canada/Newfoundland
Canada/Pacific
Canada/Saskatchewan
Canada/Yukon

Chile
Chile/Continental
Chile/EasterIsland

Europe
Europe/Amsterdam
Europe/Andorra
Europe/Astrakhan
Europe/Athens
Europe/Belfast
Europe/Belgrade
Europe/Berlin
Europe/Bratislava
Europe/Brussels
Europe/Bucharest
Europe/Budapest
Europe/Busingen
Europe/Chisinau
Europe/Copenhagen
Europe/Dublin
Europe/Gibraltar
Europe/Guernsey
Europe/Helsinki
Europe/Isle_of_Man
Europe/Istanbul
Europe/Jersey
Europe/Kaliningrad
Europe/Kiev
Europe/Kirov
Europe/Lisbon
Europe/Ljubljana
Europe/Luxembourg
Europe/Madrid
Europe/Malta
Europe/Mariehamn
Europe/Minsk
Europe/Monaco
Europe/Nicosia
Europe/Oslo
Europe/Podgorica
Europe/Prague
Europe/Riga
Europe/Rome
Europe/Samara
Europe/San_Marino
Europe/Sarajevo
Europe/Saratov
Europe/Simferopol
Europe/Skopje
Europe/Sofia
Europe/Stockholm
Europe/Tallinn
Europe/Tirane
Europe/Tiraspol
Europe/Ulyanovsk
Europe/Uzhgorod
Europe/Vaduz
Europe/Vatican
Europe/Vienna
Europe/Vilnius
Europe/Volgograd
Europe/Warsaw
Europe/Zagreb
Europe/Zaporozhye
Europe/Zurich

Indian
Indian/Antananarivo
Indian/Chagos
Indian/Christmas
Indian/Cocos
Indian/Comoro
Indian/Kerguelen
Indian/Mahe
Indian/Maldives
Indian/Mauritius
Indian/Mayotte
Indian/Reunion

Mexico
Mexico/BajaNorte
Mexico/BajaSur
Mexico/General

Pacific
Pacific/Apia
Pacific/Auckland
Pacific/Bougainville
Pacific/Chatham
Pacific/Chuuk
Pacific/Easter
Pacific/Efate
Pacific/Enderbury
Pacific/Fakaofo
Pacific/Fiji
Pacific/Funafuti
Pacific/Galapagos
Pacific/Gambier
Pacific/Guadalcanal
Pacific/Guam
Pacific/Johnston
Pacific/Kiritimati
Pacific/Kosrae
Pacific/Kwajalein
Pacific/Majuro
Pacific/Marquesas
Pacific/Midway
Pacific/Nauru
Pacific/Niue
Pacific/Norfolk
Pacific/Pago_Pago
Pacific/Palau
Pacific/Pitcairn
Pacific/Pohnpei
Pacific/Ponape
Pacific/Port_Moresby
Pacific/Rarotonga
Pacific/Saipan
Pacific/Samoa
Pacific/Tahiti
Pacific/Tarawa
Pacific/Tongatapu
Pacific/Truk
Pacific/Wake
Pacific/Wallis
Pacific/Yap

US
US/Alaska
US/Aleutian
US/Arizona
US/Central
US/East-Indiana
US/Eastern
US/Hawaii
US/Indiana-Starke
US/Michigan
US/Mountain
US/Pacific
US/Samoa

This product contains open-source software

This product contains open-source software licensed under the GNU Public License (GPL). A copy of the GNU Public License is included below. Under this license you are eligible to receive a copy of the source code of this software including any changes.

EVS Broadcast Equipment shall provide the source code on request either through physical distribution or electronic communication. For physical distribution you may be charged a fee that covers distribution costs. This offer is valid up to three years after date of purchase. Please direct your request to the support department of EVS Broadcast Equipment.

EVS Broadcast Equipment supports open-source software by participating in the development of open-source projects or submitting improvements to these projects. For more information see http://opensource.axon.tv/

GNU Public License version 2

TERMS AND CONDITIONS FOR COPYING, DISTRIBUTION AND MODIFICATION

0. This License applies to any program or other work which contains a notice placed by the copyright holder saying it may be distributed under the terms of this General Public License. The “Program”, below, refers to any such program or work, and a “work based on the Program” means either the Program or any derivative work under copyright law: that is to say, a work containing the Program or a portion of it, either verbatim or with modifications and/or translated into another language. (Hereinafter, translation is included without limitation in the term “modification”.) Each licensee is addressed as “you”.

Activities other than copying, distribution and modification are not covered by this License; they are outside its scope. The act of running the Program is not restricted, and the output from the Program is covered only if its contents constitute a work based on the Program (independent of having been made by running the Program). Whether that is true depends on what the Program does.

1. You may copy and distribute verbatim copies of the Program’s source code as you receive it, in any medium, provided that you conspicuously and appropriately publish on each copy an appropriate copyright notice and disclaimer of warranty; keep intact all the notices that refer to this License and to the absence of any warranty; and give any other recipients of the Program a copy of this License along with the Program.

You may charge a fee for the physical act of transferring a copy, and you may at your option offer warranty protection in exchange for a fee.

2. You may modify your copy or copies of the Program or any portion of it, thus forming a work based on the Program, and copy and distribute such modifications or work under the terms of Section 1 above, provided that you also meet all of these conditions:

a) You must cause the modified files to carry prominent notices stating that you changed the fi les and the date of any change.
b) You must cause any work that you distribute or publish, that in whole or in part contains or is derived from the Program or any part thereof, to be licensed as a whole at no charge to all third parties under the terms of this License.
c) If the modified program normally reads commands interactively when run, you must cause it, when started running for such interactive use in the most ordinary way, to print or display an announcement including an appropriate copyright notice and a notice that there is no warranty (or else, saying that you provide a warranty) and that users may redistribute the program under these conditions, and telling the user how to view a copy of this License. (Exception: if the Program itself is interactive but does not normally print such an announcement, your work based on the Program is not required to print an announcement.)

These requirements apply to the modified work as a whole. If identifiable sections of that work are not derived from the Program, and can be reasonably considered independent and separate works in themselves, then this License, and its terms, do not apply to those sections when you distribute them as separate works. But when you distribute the same sections as part of a whole which is a work based on the Program, the distribution of the whole must be on the terms of this License, whose permissions for other licensees extend to the entire whole, and thus to each and every part regardless of who wrote it.

Thus, it is not the intent of this section to claim rights or contest your rights to work written entirely by you; rather, the intent is to exercise the right to control the distribution of derivative or collective works based on the Program.

In addition, mere aggregation of another work not based on the Program with the Program (or with a work based on the Program) on a volume of a storage or distribution medium does not bring the other work under the scope of this License.

3. You may copy and distribute the Program (or a work based on it, under Section 2) in object code or executable form under the terms of Sections 1 and 2 above provided that you also do one of the following:

a) Accompany it with the complete corresponding machine-readable source code, which must be distributed under the terms of Sections 1 and 2 above on a medium customarily used for software interchange; or,

b) Accompany it with a written offer, valid for at least three years, to give any third party, for a charge no more than your cost of physically performing source distribution, a complete machine-readable copy of the corresponding source code, to be distributed under the terms of Sections 1 and 2 above on a medium customarily used for software interchange; or,
c) Accompany it with the information you received as to the offer to distribute corresponding source code. (This alternative is allowed only for noncommercial distribution and only if you received the program in objects code or executable form with such an offer, in accord with Subsection b above.)

The source code for a work means the preferred form of the work for making modifications to it. For an executable work, complete source code means all the source code for all modules it contains, plus any associated interface definition fi les, plus the scripts used to control compilation and installation of the executable. However, as a special exception, the source code distributed need not include anything that is normally distributed (in either source or binary form) with the major components (compiler, kernel, and so on) of the operating system on which the executable runs, unless that component itself accompanies the executable.

If distribution of executable or object code is made by offering access to copy from a designated place, then offering equivalent access to copy the source code from the same place counts as distribution of the source code, even though third parties are not compelled to copy the source along with the object code.

4. You may not copy, modify, sublicense, or distribute the Program except as expressly provided under this License. Any attempt otherwise to copy, modify, sublicense or distribute the Program is void, and will automatically terminate your rights under this License. However, parties who have received copies, or rights, from you under this License will not have their licenses terminated so long as such parties remain in full compliance.

5. You are not required to accept this License, since you have not signed it. However, nothing else grants you permission to modify or distribute the Program or its derivative works. These actions are prohibited by law if you do not accept this License. Therefore, by modifying or distributing the Program (or any work based on the Program), you indicate your acceptance of this License to do so, and all its terms and conditions for copying, distributing or modifying the Program or works based on it.

6. Each time you redistribute the Program (or any work based on the Program), the recipient automatically receives a license from the original licensor to copy, distribute or modify the Program subject to these terms and conditions. You may not impose any further restrictions on the recipients' exercise of the rights granted herein. You are not responsible for enforcing compliance by third parties to this License.

7. If, as a consequence of a court judgment or allegation of patent infringement or for any other reason (not limited to patent issues), conditions are imposed on you (whether by court order, agreement or otherwise) that contradict the conditions of this License, they do not excuse you from the conditions of this License. If you cannot distribute so as to satisfy simultaneously your obligations under this License and any other pertinent obligations, then as a consequence you may not distribute the Program at all. For example, if a patent license would not permit royalty-free redistribution of the Program by all those who receive copies directly or indirectly through you, then the only way you could satisfy both it and this License would be to refrain entirely from distribution of the Program.

If any portion of this section is held invalid or unenforceable under any particular circumstance, the balance of the section is intended to apply and the section as a whole is intended to apply in other circumstances.

It is not the purpose of this section to induce you to infringe any patents or other property right claims or to contest validity of any such claims; this section has the sole purpose of protecting the integrity of the free software distribution system, which is implemented by public license practices. Many people have made generous contributions to the wide range of software distributed through that system in reliance on consistent application of that system; it is up to the author/donor to decide if he or she is willing to distribute software through any other system and a licensee cannot impose that choice.

This section is intended to make thoroughly clear what is believed to be a consequence of the rest of this License.

8. If the distribution and/or use of the Program is restricted in certain countries either by patents or by copyrighted interfaces, the original copyright holder who places the Program under this License may add an explicit geographical distribution limitation excluding those countries, so that distribution is permitted only in or among countries not thus excluded. In such case, this License incorporates the limitation as if written in the body of this License.

9. The Free Software Foundation may publish revised and/or new versions of the General Public License from time to time. Such new versions will be similar in spirit to the present version, but may differ in detail to address new problems or concerns.

Each version is given a distinguishing version number. If the Program specifies a version number of this License which applies to it and "any later version", you have the option of following the terms and conditions either of that version or of any later version published by the Free Software Foundation. If the Program does not specify a version number of this License, you may choose any version ever published by the Free Software Foundation.

10. If you wish to incorporate parts of the Program into other free programs whose distribution conditions are different, write to the author to ask for permission. For software which is copyrighted by the Free Software Foundation, write to the Free Software Foundation; we sometimes make exceptions for this. Our decision will be guided by the two goals of preserving the free status of all derivatives of our free software and of promoting the sharing and reuse of software generally.

NO WARRANTY

11. BECAUSE THE PROGRAM IS LICENSED FREE OF CHARGE, THERE IS NO WARRANTY FOR THE PROGRAM, TO THE EXTENT PERMITTED BY APPLICABLE LAW. EXCEPT WHEN OTHERWISE STATED IN WRITING THE COPYRIGHT HOLDERS AND/OR OTHER PARTIES PROVIDE THE PROGRAM "AS IS" WITHOUT WARRANTY OF ANY KIND, EITHER EXPRESSED OR IMPLIED, INCLUDING, BUT NOT LIMITED TO, THE IMPLIED WARRANTIES OF MERCHANTABILITY AND FITNESS FOR A PARTICULAR PURPOSE. THE ENTIRE RISK AS TO THE QUALITY AND PERFORMANCE OF THE PROGRAM IS WITH YOU. SHOULD THE PROGRAM PROVE DEFECTIVE, YOU ASSUME THE COST OF ALL NECESSARY SERVICING, REPAIR OR CORRECTION.

12. IN NO EVENT UNLESS REQUIRED BY APPLICABLE LAW OR AGREED TO IN WRITING WILL ANY COPYRIGHT HOLDER, OR ANY OTHER PARTY WHO MAY MODIFY AND/OR REDISTRIBUTE THE PROGRAM AS PERMITTED ABOVE, BE LIABLE TO YOU FOR DAMAGES, INCLUDING ANY GENERAL, SPECIAL, INCIDENTAL OR CONSEQUENTIAL DAMAGES ARISING OUT OF THE USE OR INABILITY TO USE THE PROGRAM (INCLUDING BUT NOT LIMITED TO LOSS OF DATA OR DATA BEING RENDERED INACCURATE OR LOSSES SUSTAINED BY YOU OR THIRD PARTIES OR A FAILURE OF THE PROGRAM TO OPERATE WITH ANY OTHER PROGRAMS), EVEN IF SUCH HOLDER OR OTHER PARTY HAS BEEN ADVISED OF THE POSSIBILITY OF SUCH DAMAGES.

Corporate
+32 4 361 7000

North & Latin America
+1 973 575 7811

Asia & Pacific
+852 2914 2501

Other regional offices
www.evs.com/contact

EVS Headquarters
Liège Science Park
13, rue Bois St Jean
B-4102 Seraing
Belgium

To learn more about EVS go to **www.evs.com**