INSTALLATION AND OPERATION MANUAL

Synapse
MGU200 - MGG200

4K (MGU200) / 3Gbps (MGG200), HD, SD SDI
Eightfold Multiview Building Block (ACP1 model)

Version 1.00 | December 2021

Corporate
+32 4 361 7000

North & Latin America
+1 973 575 7811

Asia & Pacific
+852 2914 2501

Other regional offices
evs.com/contact/offices

→ evs.com

Disclaimer

This manual and the information contained herein are the sole property of EVS Broadcast Equipment SA and/or its affiliates (EVS) and are provided "as is" without any expressed or implied warranties, including, but not limited to, the implied warranties of merchantability and fitness for a particular purpose. In particular, EVS makes no warranty regarding the use or the consequences of use of this manual and the information contained herein. Furthermore, EVS may not be held liable for any direct or indirect, incidental, punitive or consequential loss, damage, cost or expense of any kind whatsoever and howsoever resulting from the normal or abnormal use of this manual and the information contained herein, even if advised of the possibility of such loss, damage, cost or expense.

While every effort has been made to ensure that the information contained in this manual is accurate, up-to-date and reliable, EVS cannot be held liable for inaccuracies or errors that may appear in this publication. The information in this manual is furnished for informational purpose and use only and subject to change without notice.

This manual cancels and replaces any previous versions thereof.

Copyright

Trademarks

All product and brand names are registered trademarks and trademarks of EVS or of their respective owners.

Improvement Requests

Your comments will help us improve the quality of the user documentation. Please send improvement requests, or report any error or inaccuracy on this user manual by e-mail to doc@evs.com.

Regional Contacts

You will find the full list of addresses and phone numbers on the following webpage: https://evs.com/contact/offices.

User Manuals on EVS Website

The latest version of the user manual, if any, and other user manuals on EVS products can be found at the EVS download center, on the following webpage: https://download-area.evs.com.

General Information

ALWAYS disconnect your entire system from the AC mains before cleaning any component. The product frame (SFR18, SFR08 or SFR04) must be terminated with three-conductor AC mains power cord that includes an earth ground connection. To prevent shock hazard, all three connections must always be used.

NEVER use flammable or combustible chemicals for cleaning components.

NEVER operate this product if any cover is removed.

NEVER wet the inside of this product with any liquid.

NEVER pour or spill liquids directly onto this unit.

NEVER block airflow through ventilation slots.

NEVER bypass any fuse.

NEVER replace any fuse with a value or type other than those specified.

NEVER attempt to repair this product. If a problem occurs, contact your local EVS distributor.

NEVER expose this product to extremely high or low temperatures.

NEVER operate this product in an explosive atmosphere.

To reduce the risk of fire or electrical shock, do not expose this appliance to rain or moisture.

This product complies with the requirements of the product family standards for audio, video, audio-visual entertainment lighting control apparatus for professional use as mentioned below.

CE	EN60950	Safety
	EN55103-1: 1996	Emission
	EN55103-2: 1996	Immunity

Tested to comply with FCC Standards

FOR HOME OR OFFICE USE

This device complies with Part 15 of the FCC Rules. Operation is subject to the following two conditions:

1. This device may cause harmful interference, and
2. This device must accept any interference received, including interference that may cause undesired operation.

Contents

ICONOGRAPHY

	Note		Tip		Warning

What's New?

In the Installation and Operation Manual the icon NEW ! has been added on the left margin to highlight information on updated features.

No changes in version 1.00 of the MGU200 - MGG200 require an update to the current manual.

1. Introduction

Synapse is a modular system designed for the broadcast industry. High density, intuitive operation and high-quality processing are key features of this system. Synapse offers a full range of converters and processing modules. Please visit the EVS website at www.evs.com to obtain the latest information on our new products and updates.

Local Control Panel

The local control panel gives access to all adjustable parameters and provides status information for any of the cards in the Synapse frame, including the Synapse rack controller. The local control panel is also used to back-up and restore card settings. Please refer to the RRC18, RRC10, RRC04, RRS18 and RRS04 manuals for a detailed description of the local control panel, the way to set up remote control over IP and for frame-related settings and status information.

Remote Control Capabilities

The remote-control options are explained in the rack controller (RRC18 / RRC10 / RRC04 / RRS18 / RRS04 / ERC108-118 / ERS108-118) manuals. The method for connecting to a computer using Ethernet is also described in the ERC/ERS/RRC/RRS manuals.

Cortex software will increase system flexibility of one or more Synapse frames.

Although it is not required to use Cortex with a Synapse frame, you are strongly advised to use a remote personal computer or laptop PC with Cortex installed, as this increases the ease of use and understanding of the modules.

2. Unpacking and Placement

Unpacking

The EVS Synapse card must be unpacked in an anti-static environment. Care must be taken NOT to touch components on the card – always handle the card carefully by the edges. The card must be stored and shipped in anti-static packaging. Ensuring that these precautions are followed will prevent premature failure of components mounted on the board.

Placing the Card

The Synapse card can be placed vertically in an SFR18 frame or horizontally in an SFR04 and SFR08 frame. Locate the two guide slots to be used, slide in the mounted circuit board, and push it firmly to locate the connectors.

Correct insertion of the card is essential, as a card that is not located properly may show valid indicators, but will not function correctly.

On power up, all LEDs will light up for a few seconds. This is the time it takes to initialize the card.

Power Consumption

When using MGG or MGU cards, the power consumption is higher than usual because of the high-performance chips on the board. The following power supply and card combinations are recommended.

Power Supply	Power level (W)	Number of Cards
SMP25	75	2
SMP80	240	6
SMP110	330	8
SMP175	525	8 cards (12 cards when using an SFR18 Gen3 frame)

3. Quick Start

Powering Up

On powering up the Synapse frame, the card set will use basic data and default initialization settings. All LEDs will light up during this process. After initialization, several LEDs will remain lit – the exact number and configuration is dependent upon the number of inputs connected and the status of the inputs.

Default Settings

In its default state, the MGG200 will act as dual-head, eightfold split. The auto format detection will recognize the input format. The SDI outputs are set to four-wire 4K resolution with a frame rate of 60 Hz.

3.1. Changing Settings and Parameters

The front panel controls or Cortex can be used to change the settings. An overview of the settings can be found in later chapters of this manual. Please refer to "Settings Menu" on page 12, "Status Menu" on page 27 and "Events Menu" on page 33.

Front Panel Control

Front Panel Display and Cursor

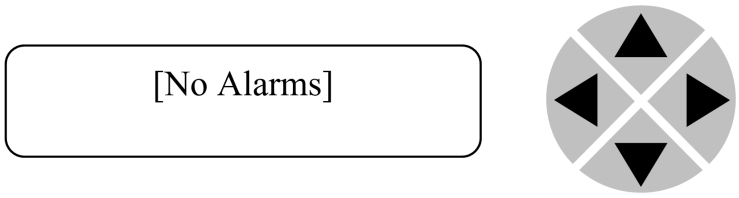

Settings are displayed and changed as follows:

Use the cursor 'arrows' on the front panel to select the menu and parameter to be displayed and/or changed.

▶ Move forward through the menu structure.

◀ Go back through the menu structure.

▲ Move up within a menu, or increase the value of a parameter.

▼ Move down through a menu or decrease the value of a parameter.

When editing parameters, pressing ▶ twice will reset the value to its default setting.

How to Change Parameters Using the Front Panel Control

With the display as shown below:

```
RRC18 [Select Card]
>S01=SFS10
```

Pressing ▶ selects the SFS10 in frame slot 01.

The display changes to indicate that the SFS10 has been selected. In this example the Settings menu item is indicated.

```
SFS10 [Select Menu]
>Settings
```

Pressing the ▶ selects the menu item shown, in this example Settings.

(Pressing ▲ or ▼ will change to a different menu, e.g. Status, Events).

The display changes to indicate that the SFS10 Settings menu item SDI-Format has been selected and shows that its current setting is Auto.

```
SFS10 [Settings]
>SDI-Format=Auto
```

Pressing the ▶ selects the Settings item shown, in this example SDI-Format.

(Pressing ▲ or ▼ will change to a different setting, e.g. Mode, H-Delay).

The display changes to indicate that the SFS10 Edit Setting menu item SDI-Format has been selected.

```
SFS10 [Edit Setting]
SDI-Format>Auto
```

To edit the setting of the menu item, press ▲ or ▼.

All menu items can be monitored and/or changed in this way. Changing a setting has an immediate effect.

Menu Structure Example

Slot	Module		Item		Parameter		Setting
▲							
▲							
S02			Identity				
▲			▲				
S01	SFS10	►	Settings	►	Standard dig	►	Auto
▼			▼		▼		▼
S00	RRC18		Status		Mode		625
			▼		▼		▼
			Events		Ref-Input		525
					▼		
					H-Delay		
					▼		
					▼		

3.2. Using Cortex with Synapse

EVS Cortex Software

Cortex can be used to change the settings of Synapse modules from a PC, either locally or remotely. The software enables communication based on TCP/IP between the Setup PC and Synapse frames/modules.

Each Synapse frame is addressed through its rack controller's unique IP address, giving access to each module, its menus and adjustment items. Cortex has access to data contained within the Synapse module and displays it on a GUI. The software has an intuitive structure following that of the module that it is controlling.

For operation of Cortex, please refer to the Cortex help files.

Further information about Front Panel Control and Cortex can be obtained from the ERC, ERS, RRC and RRS operational manuals and the Cortex help files.

3.3. Daisy Chain Mode

Daisy chain mode refers to the way several multiviewer cards can be connected to one another, in order to be able to configure a greater number of input streams.

Daisy Chain mode is applicable to the MGU, MGG and MNU modules only.

How to Connect Cards in Daisy Chain Mode

The multiviewer cards have to be connected using the cables provided specifically for this purpose.

The illustrations below show how the cables are connected in order to daisy chain different types of cards in an SFR18 frame.

The internal video path consists of two UHD/4K (3840x2160 pixels) heads. If a source can be scaled and positioned twice, as in the MGU200, each scaled and positioned image will be positioned on each head independently. There is a scaler per input for head 1 and a scaler for head 2 in this case. Even though the card has 8 SDI outputs and they can be used independently as 8 streams, the limitation remains that the cores consists of two UHD heads.

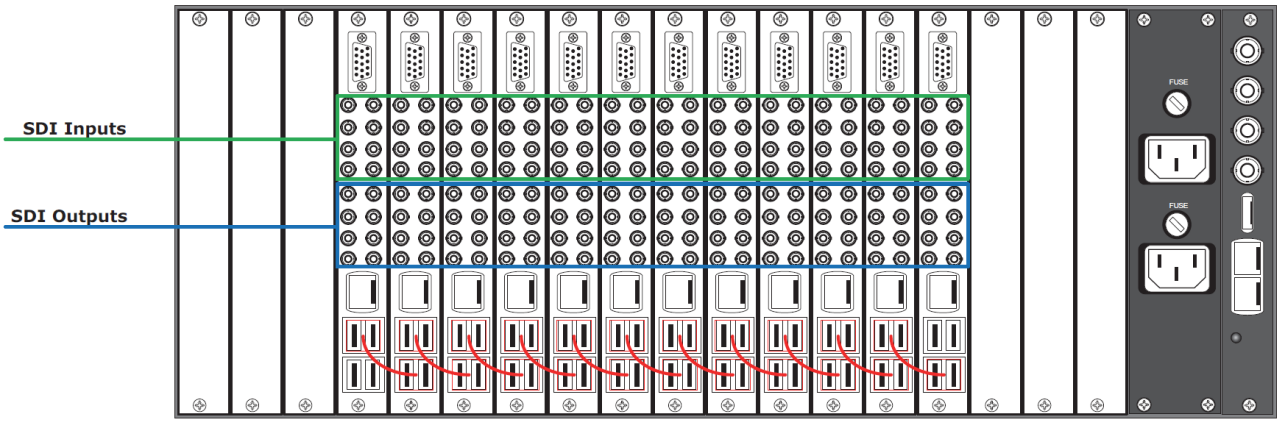

Fig. 1. 12 x SDI based combinations example with daisy chaining for single multiview set

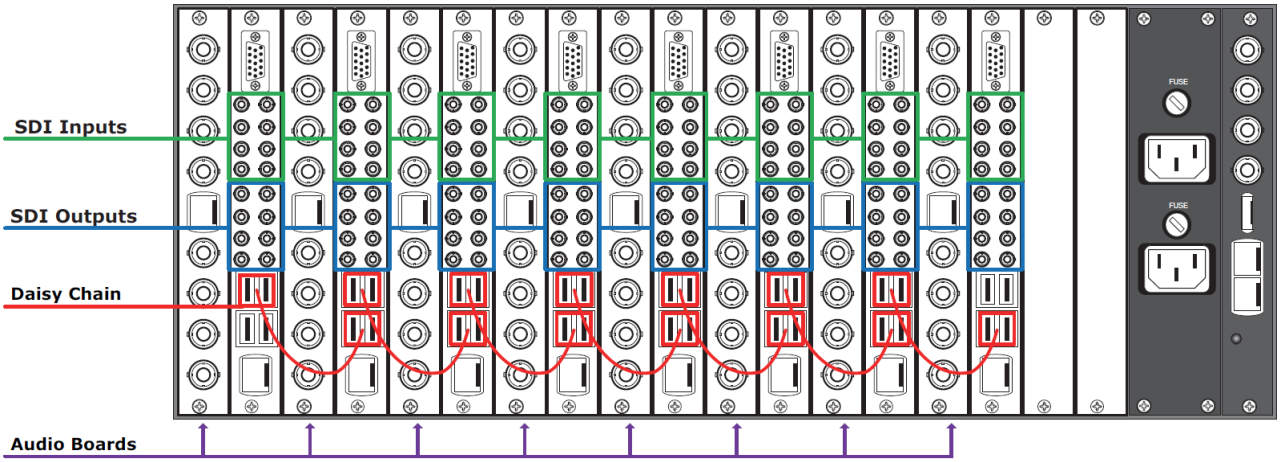

Fig. 3. 8 x SDI based combinations with daisy chaining for a single multiview set and 8 Quad Speed Bus connected audio cards, such as DIO88 for external AES inputs or DEE28 for Dolby E decoding

The output status enables you to check that the bus is connected correctly.

For more information, please refer to "System Status" on page 27.

Output Configuration

The following illustration shows a possible configuration where 16 MGU100 or MGU200 cards are daisychained with the SynView loop connectors to create a 128-input 8-output multiviewer on 8 multiviewer heads.

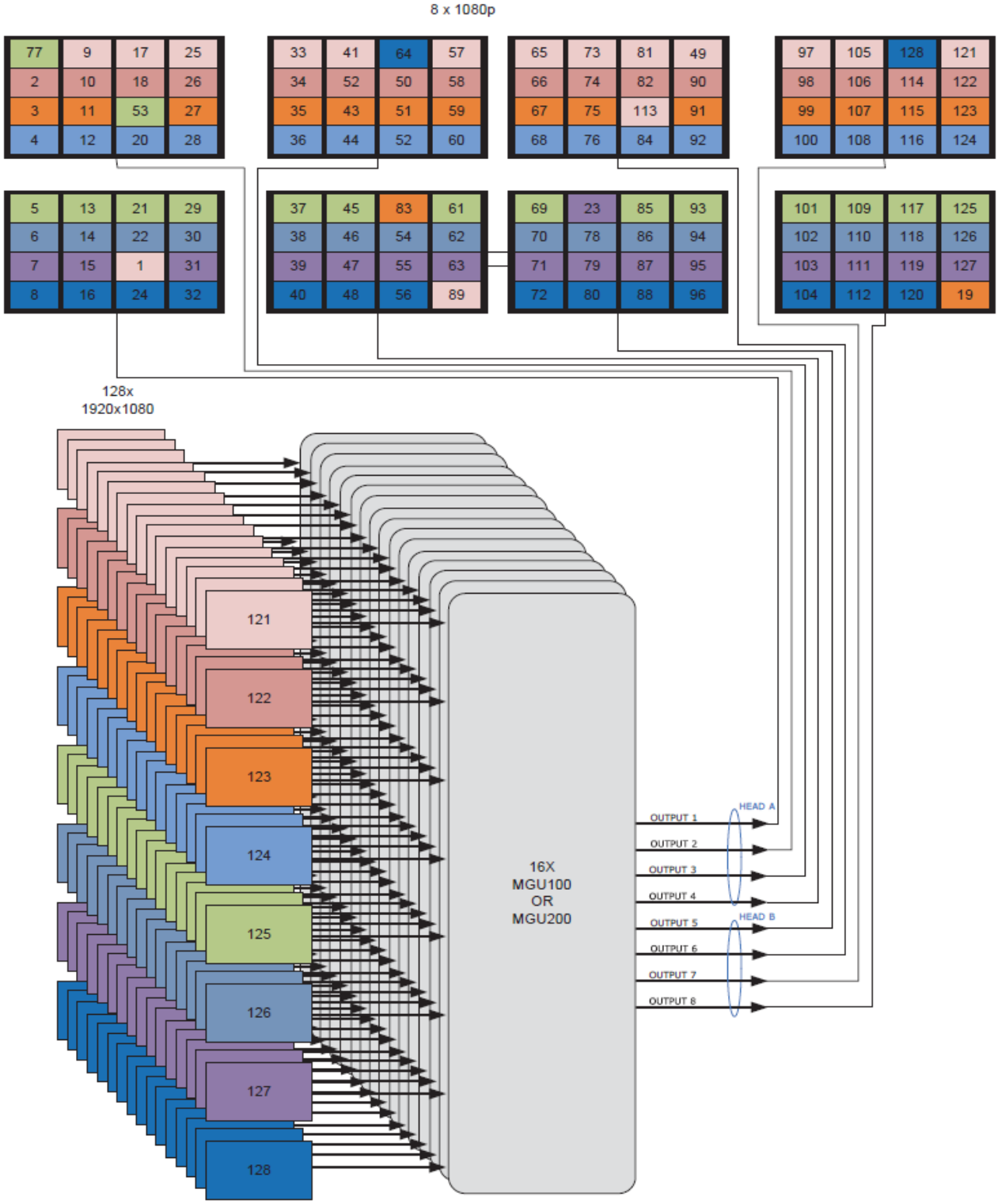

4. The MGU200 / MGG200 Card

Introduction

SynView is EVS's next generation Synapse modular multiviewer. The feature set has been increased tremendously, with double the amount of inputs and up to 8 times the amount of outputs (heads) UHD/4K/60Hz output resolution on display outputs and a 6-fold increase in processing power.

The system consists of 4 basic models. These versions can be mixed and matched to build a hybrid multiviewer with up to several hundred inputs and 8 x 1080p heads (on SDI) or 2 heads with UHD/4K resolution. Multiple connector panels will be available to allow for different I/O configurations.

The specific features of the 4 models are defined below:

Model Name / Application	**Differentiation**					
	SDI In	**SDI Out**	**IP Inputs**	**IP Outputs**	**PIP (scalers)**	**Monitoring**
MGU200 Production SDI Inputs	8	8	-	-	16	Basic
MGG200 Production SDI Inputs	8	2	-	-	16	Basic
MGU100 Monitoring SDI Inputs	8	8	-	-	8	Extensive
MGG100 Monitoring SDI Inputs	8	2	-	-	8	Extensive

The above cards have the same output configuration, with up to dual head UHD/4K on dual quad 3Gb/s SDI (with a 5V powered quad SDI to HDMI converter), or 8 heads on SDI. The cards can be combined in any combination, with up to 12 cards in the new SFR18 gen3 using the new SMP175 power supply.

With the external Daisy Chain mini SAS-HD connector, you can in theory build a multiviewer with an unlimited amount of input channels, as you can chain the cards even between frames.

As in the original SynView system, you can split the multiviewer into smaller chunks of cards. An MGU200 can also be used stand alone as a dual quad-split (or even octo-split) with eight 1080p pictures spread over 2 UHD screens (pixel mapping with no scaling).

Features

- 8 inputs to two individual panel outputs or 8 SDI (1080p) outputs (MGU200 only)
- 8 inputs to two individual panel outputs or 2 SDI (1080p) outputs
- Each input can be displayed on each head with individual scale and position
- Low latency (20 ms for 50Hz, 17 ms for 59.94Hz)
- Full RGB domain (internal 20-bit processing for scaling)
- Up to 4K output production multiviewer with 8 PIP (scalers) (MGU200 only)
- Up to 2 x 4K/UHD (2160p60) resolution on dual quad SDI, using a quad SDI to HDMI converter (MGU200 only)
- Up to 3GB/s production multiviewer with 8 PIP (scalers)
- Up to 8 3Gb/s SDI outputs
- Full variable scaling and positioning for all individual inputs
- All inputs compatible with (mixing is allowed with different frame rates):
  - 1080p 50 and 59.94
  - 1080i and 720p 50 and 59.94 Hz
  - 1080p (sf) and 720p 29.97/25/24
  - SD 625 and 525
- 32 audio bars free assignable from 128 embedded sources and/or 32 sources via the Quad Speed Audio bus
- Three assignable regions in or under monitor: Input format, Static UMD and Dynamic UMD, VITC, ATC
- Lock to input, reference or free running
- Audio metering
  - Up to 32 Bar-graphs per head (MGG200 only)
  - Masked or transparent bar-graphs
  - AES/EBU, BBC and Nordic scales
  - Customizable color schemes for audio meters
- Two definable clocks per head
  - Analog
  - Digital
  - Combined
- Two Clocks can be assigned to VITC, ATC, LTC, SNTP (Ethernet) or system
- UMD colors: gray, green, red and amber

- Border, UMD and tally brightness adjustment
- Safe area markers
- Automatic 4:3 and 16:9 modes through VI or WSS triggers (SD SDI inputs)
- GPI control for Aspect ratio, Full screen or quad mode and Tally
- Locks to Bi-level, Tri-level syncs or SDI input
- Full control and status monitoring through the front panel of the SFR04 / SFR08 / SFR18 frame and the Ethernet port (ACP1).

Position of the Inputs on Output

Default positions of the inputs on the head:

Input 1	Input 2	Input 3	Input 4
Input 5	Input 6	Input 7	Input 8

GPI Contacts

With the local GPI contacts you can control (in settings) the following objects:

- Full screen or eight-split
- Tally and Border indication
- Counter

Please refer to "Block Schematic" on page 36 for the connections.

Updating the Card

This card has an unconventional way of updating with new or other firmware. For an explanation of how this is done, please refer to the **Synapse Module Reprogramming Guide**, which can be downloaded from the EVS website.

5. Settings Menu

5.1. Introduction

The Settings menu displays the current state of each MGG200-MGU200 setting and allows you to change or adjust it.

Settings can be changed using the front panel of the Synapse frame (SFR18, SFR08 or SFR04) or with Cortex. The SCP08 control can also be used. Please refer to "Quick Start" on page 3 for information on the Synapse front panel control and Cortex.

All items preceded with a # sign are part of the presets.

5.2. System Settings

Setting	Description
Lock-Mode	The MGU200-MGG200 can be locked to a reference (in the SFR18 and SFR08, there are 2 reference inputs: Ref1 = top input, Ref2 = bottom input), to an input or to its own oscillator. Lock-Mode determines how the card is locked. Options are **Ref1**, **Ref2** and **SDI1** or **Freerun**. If SDI1 is selected, the card will lock to the first input. Default setting is Ref1.
To prevent picture “hopping” on the multiview output, make sure that the input (or the card) is locked to a reference.	
Out-FrmtA	The Out-FrmtA menu item sets the output resolution as present at the SDI output connector 1 to 4. The selectable resolutions are (Default setting is 2160p50): • 2160p60 • 2160i60 • 1080p60 • 1080i60 • 2160p50 • 2160i50 • 1080p50 • 1080i50 For the MGG200, the resolution table is slightly different. The Out-FrmtA menu item sets the output resolution as present at the SDI output connector 1. SDI output connectors 2 to 4 are a copy of connector 1. The selectable resolutions are: • 1080p60 • 1080i60 • 1080p50 (default) • 1080i50
The vertical refresh rate of the display has to be 50 or 60 Hz. The card can use either 50 or 60 Hz monitors (European or US) independent of the inputs.	

Output_Map_A	The Output_Map_A menu item sets the output in 3G mapping. Can be **Level-A** or **Level-B-DL**.
4K_Map_A (MGU200 only)	In 4K/UHD output mode, the system can be set up in two output modes. This will be 4Ch_4Quadrants or 4Ch_SI. The default setting is 4Ch_4Quadrants.
Out-FrmtB	The Out-FrmtB menu item sets the output resolution as present at the SDI output connector 5 to 8. The selectable resolutions are (Default setting is 2160p50): • 2160p60 • 1080p60 • 1080i60 • 2160p50 • 1080p50 • 1080i50 For the MGG200, the resolution table is slightly different. The Out-FrmtA menu item sets the output resolution as present at the SDI output connector 1. SDI output connectors 2 to 4 are a copy of connector 1. The selectable resolutions are (Default setting is 1080p50): • 1080p60 • 1080i60 • 1080p50 • 1080i50

The vertical refresh rate of the display has to be 50 or 60 Hz. The card can use either 50 or 60 Hz monitors (European or US) independent of the inputs.

Output_Map_B	The Output_Map_B menu item sets the output in 3G mapping. Can be **Level-A** or **Level-B-DL**.
4K_Map_B	In 4K/UHD output mode the system can be setup in two output modes. This will be 4Ch_4Quadrants or 4Ch_SI. The default setting is 4Ch_4Quadrants.
Daisy-HeadA / Daisy-HeadB	With this setting, you can set how the card is functioning in a multiview setup. You can set the card to **In-Only** to only receive Video over the bus from other cards and not output any signals to the bus (last card in the multiview card chain). When set to **Out-Only**, the card will only output its signal to the bus and not accept Video from the bus (first card in the multiview chain). When set to **In-Out**, the card will both accept Video input from the bus as well as output its signals to the bus (cards in the middle of a multiview chain). **Disable** will set the card to work on its own (= default setting).

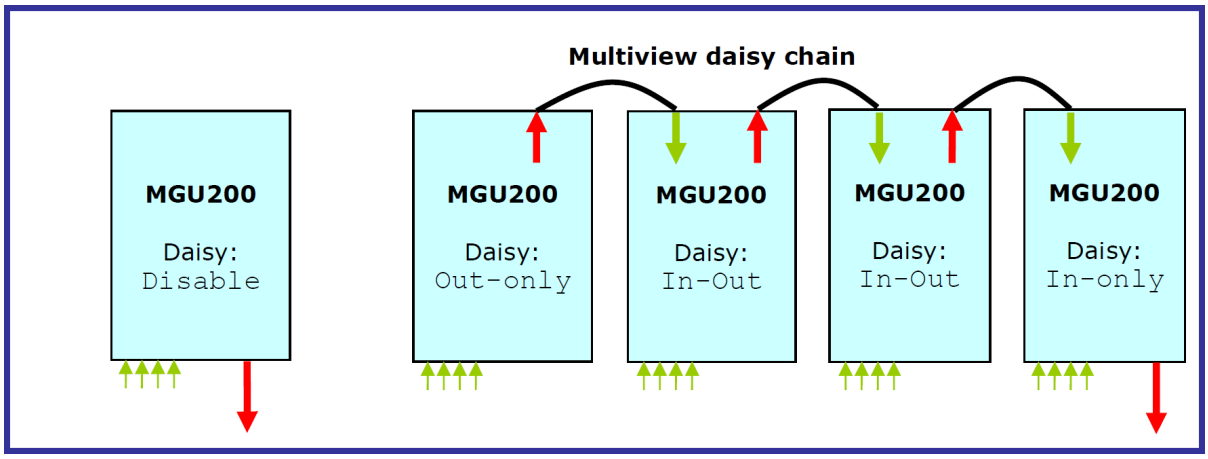

Head-Ref-OffsetA / Head-Ref-OffsetB	This setting is used to define the output timing of the card's SDI output in relation to the reference.
Layout-HeadA / Layout-HeadB	With this setting you can choose between 8 different layout presets. These presets are stored on the MGG200-MGU200 card. If more layout presets need to be stored, use Cortex. Adjusting the settings of these presets and changing this menu item to other presets will have direct effect on the output. All menu items preceded with a '#' sign can be added to the selected preset. The presets are stored in memory. Default is Preset_1.
ScrLayout	With this setting, you can edit the 8 presets without the changes having any direct effect on the output (unless you are editing the preset, which is set as active layout). Adjusting the settings of these presets and changing this menu item to other presets will have no direct effect on the output. You can use this option to change screen layout presets without these changes being visible directly on the output. Changes will only become visible when ScrLayout-HeadA/B are changed to the preset to just edit. All menu items preceded with a #-sign are possible to add to the selected preset. The presets are stored in memory. Default is Preset 1.

Layout

Setting	Description
#Inp1_Source ~ #Inp8_Source	With this setting you can switch the input source to any window. There is a choice for switching the window to off or to use SDI-1 to SDI-8 as input. Switching an input off will disable the window of that input entirely. Default for window 1 is SDI-1, window 2 is SDI-2, etc.
#Inp1_x ~ #Inp8_x	The #Inp_x setting sets the X coordinate of the top left corner of the window of the input. Settings are shown as percentages (with 0.5% increments) of the total width of the screen. The defaults are as follows: *Input* — *Percentage* #Inp1_x — 1% #Inp2_x — 34% #Inp3_x — 67% #Inp4_x — 1% #Inp5_x — 34% #Inp6_x — 67% #Inp7_x — 1% #Inp8_x — 34%

#Inp1_y ~ #Inp8_y	The #Inp_y setting sets the Y coordinate of the top left corner of the window of the input. Settings are shown as percentages (with 0.5% increments) of the total width of the screen. The defaults are as follows: *Input* *Percentage* *Input* *Percentage* #Inp1_y 1% #Inp2_y 1% #Inp3_y 1% #Inp4_y 34% #Inp5_y 34% #Inp6_y 34% #Inp7_y 67% #Inp8_y 67%
#Inp1_w ~ #Inp8_w	The #Inp_w settings set the width of the window of the input. Settings are done with percentages (with 0.1% increments) of the total width of the screen. Default for all #Inp_w settings are 32%.
#Inp1_h ~ #Inp8_h	The #Inp_h settings set the height of the window of the input. Settings are done with percentages (with 0.1% increments) of the total height of the screen. Default for all #Inp_h settings are 32%.
#Inp1_BarStyle ~ #Inp8_BarStyle	These settings define the individual bar styles (UMD and Tally) of the input windows. It can be set to be displayed **Under** or **Over** the window. Default is Under.
#Inp1_ShowUMD ~ #Inp8_ShowUMD	Enables the under monitor display to be visible or invisible. Choices are Off or On. Default this setting is Off.
#Inp1_ShowTal ~ #Inp8_ShowTal	With these items you can show or hide the tallies. When switched On, they are displayed. Switched Off, they will not be displayed. Default is Off.
#Inp1_Area1 ~ #Inp8_Area1	The card can show up to 3 separate text fields under or in the separate windows (UMD). With these settings you can set what text should be in area1 of the UMD. Can be set to: Disabled — No area 1 UMD field Static UMD (default) — Displays text as set in the corresponding Inp_UMDText setting Dynamic UMD — Displays dynamic UMD text as set in the control settings Video Format — Displays the input format of the relevant window Timecode — Displays timecode in UMD VITC — Displays VITC timecode ATC — Displays ATC timecode Aspect Ratio — Displays incoming aspect ratio data LTC1 — Displays LTC on input 1 LTC2 — Displays LTC on input 2.

#Inp1_Area2 ~ #Inp8_Area2	With these settings you can set what text should be in Area 2 of the UMD. Can be set to **Disabled** (default), **Static UMD**, **Dynamic UMD**, **Video Format**, **Timecode**, **VITC**, **ATC** and **Aspect Ratio**.
#Inp1_Area3 ~ #Inp8_Area3	With these settings you can set what text should be in Area 3 of the UMD. Can be set to **Disabled** (default), **Static UMD**, **Dynamic UMD**, **Video Format**, **Timecode**, **VITC**, **ATC** and **Aspect Ratio**.
#Inp1_Fill ~ #Inp8_Fill	The #Inp_fill settings will let you set how the window will be filled with the input. It can be set to: **Fit** (default) — Respects the input aspect ratio and uses the maximum available width or heights to show the complete picture, the rest is blacked **Zoom** — Zooms in the picture with respect to the aspect ratio, causing cut off on the sides **Anamorphic** — Fills the entire window with the picture, causing anamorphic view when the aspect ratio of the input is not the same as the aspect ratio of the window. **Raw** — Bypasses all scalers, used to evaluate the influence of the scalers.
#Inp1_SD_AR ~ #Inp8_SD_AR	This setting sets the Aspect Ratio of the input when this input is SD. It can be set to the following options: 12F12 (default) — 4:3 source Full screen on 4:3 receiver 16L12 — 16:9 source as letterbox on 4:3 receiver 16F16 — 16:9 source Full screen on 16:9 receiver 12P16 — 4:3 source as pillar-box on 16:9 receiver VI — use Video Index aspect ratio WSS — use Widescreen Signaling aspect ratio

The card only reacts to WSS signals if #Inp_fill is set to fit.

#Inp1_MtrDisplay ~ #Inp8_ MtrDisplay	With this setting, you can select the style of the audiometer bars for each individual input. You can choose between: L/R2 Stereo channel at Left/Right side of Window L/R4 2 Stereo channels at Left/Right side of Window 2+2 Stereo channel at Left and Right side of Window L/R5.1 5.1 channel at Left/Right side of Window L/R8 4 Stereo channels at Left/Right side of Window 4+4 2 Stereo channels at Left and Right side of Window L/R16 8 Stereo channels at Left/Right side of Window 8+8 4 Stereo channels at Left/Right side of Window L/R5.1+2 5.1 plus Stereo channel at Left/Right side of Window
#Inp1_MtrPos ~ #Inp8_MtrPos	With these settings, you can select a position for the audio meter bars. It is possible to set them **Over** or to the **Side** of the picture. You can also turn them Off. By default it is set to **Off**.
#Inp1_Overlay ~ #Inp8_Overlay	For an explanation of how to display on-screen closed captions, please refer to "On-Screen Closed Caption Decoding" on page 24.
#UMD_BarSize	Sets the height of the UMD regions below the windows. This can be adjusted in a percentage of the output resolution. The size can be set from 0.5% to a maximum of 15% of the output resolution. Default is 3%.
#UMD_Opacity	This sets the degree of tranparency of the UMD.
#Clk_x ~ #Clk2_x	This sets the vertical position of the first onscreen graphical clock. Can range from 0% (top) to 100% (bottom) of the total screen height. By default it is set to 0%.
#Clk_y ~ #Clk2_y	This sets the horizontal position of the first onscreen graphical clock. Can range from 0% (top) to 100% (bottom) of the total screen width. By default it is set to 0%.
#Clk_w ~ #Clk2_w	Sets the first onscreen clock width. Can be set from 2,5% to 100%. Note that the Clock will always be forced completely round. So when Clk_h is set smaller then Clk_w, Clk_w will be adjusted to the same value as Clk_h. Default is 10%.
#Clk_h ~ #Clk2_h	Sets the first onscreen clock height. Can be set from 2,5% to 100%. Note that the Clock will always be forced completely round. So when Clk_w is set smaller then Clk_h, Clk_h will be adjusted to the same value as Clk_w. Default is 10%.
#Clk_Style ~ #Clk2_Style	This sets the graphical style of the first onscreen clock. Available styles are: Analog, digital or combined (analog clock with digital clock in its background). Set to Off will turn off the onscreen clock. Default is Off.

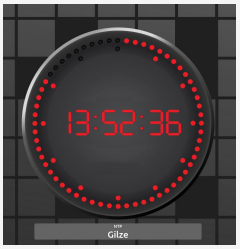	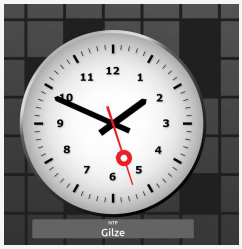	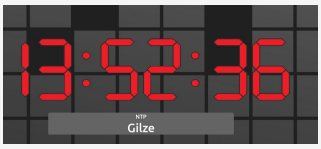
Combined	Analog	Digital
#Clk_Source ~ #Clk2_Source	This sets the time source of the first onscreen clock. Can be the VITC or the ATC of input 1 to input 8. It can also be set to **System**, in which case the clock will show the card's internal clock (uptime). The Multi view card also has two LTC inputs, physically available on the Dsub connector on the backplane. You choose between LTC1 and LTC2 input. It is possible to synchronize the internal clock to an NTP server. This way, with #Clk_source set to **NTP** (default), the clock will indicate the correct NTP time corresonding to the settings **NTPServer** and **Timezone** below in the Settings Menu.	
#Clk_Source_Inp ~ #Clk2_Source_Inp	When the Timecode is is taken from SDI, the user needs to assign which input this needs to be. This is a choice between SDI-1 to SDI-8. The default setting is SDI-1.	
#Clk_Text ~ #Clk2_Text	Sets text which is visible underneath the first clock. Can contain a maximum of 32 characters.	

Notepad

In the SynView multiviewer, we have the option to make notes on an on-screen Notepad.

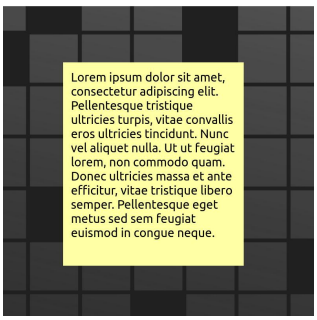

Setting	Description
#Note_Style	This enables you to make the notepad visible (**On**) or invisible (**Off**). Default is Off.
#Note_x	This sets the vertical position of the first onscreen Notepad. Can range from 0% (top) to 100% (bottom) of the total screen height. By default it is set to 0%.

#Note_y	This sets the horizontal position of the first onscreen Notepad. Can range from 0% (left) to 100% (right) of the total screen width. By default it is set to 0%.
#Note_w	Sets the first onscreen clock width. Can be set from 2,5% to 100%. Note that the Clock will always be forced completely round. So when Note _h is set smaller then Note_w, Note_w will be adjusted to the same value as Note_h. Default is 10%.
#Note_h	Sets the first onscreen clock height. Can be set from 2,5% to 100%. Note that the Clock will always be forced completely round. So when Note_w is set smaller then Note_h, C Note_h will be adjusted to the same value as Note_w. Default is 10%.

Tally and Under-Monitor Display (UMD) Color Settings

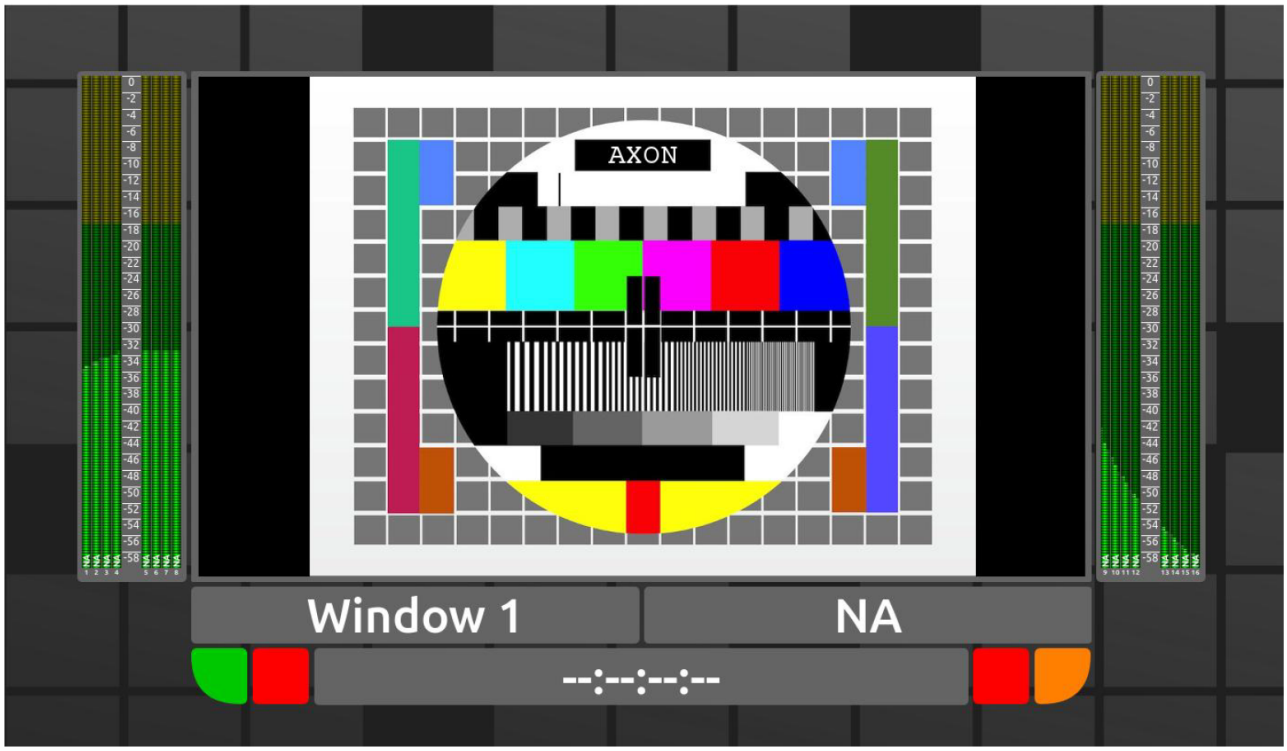

Setting	Description
Show-InpForm	Here you can select whether or not you want to display the input format in the UMD. It is also possible to display the format for 10 sec after changing the SDI format.
Inp1_Tal_l1 ~ Inp8_Tal_l1	The SynView Multiviewer cards have four tallies. Two on the left and two on the right. These settings change the color of the Tally on the far left of the inputs 1 to 8. Possible colors are Green, Red, Gray or Amber. Default for all inputs is Gray.

Inp1_Tal_l2 ~ Inp8_Tal_l2	The SynView Multiviewer cards have four tallies. Two on the left and two on the right. These settings change the color of the second Tally from the left of the inputs 1 to 8. Possible colors are Green, Red, Gray or Amber. Default for all inputs is Gray.
Inp1_Tal_r1 ~ Inp8_Tal_r1	The SynView Multiviewer cards have four tallies. Two on the left and two on the right. These settings change the color of the Tally on the far right of the inputs 1 to 8. Possible colors are Green, Red, Gray or Amber. Default for all inputs is Gray.
Inp1_Tal_r2 ~ Inp8_Tal_r2	The SynView Multiviewer cards have four tallies. Two on the left and two on the right. These settings change the color of the second Tally from the right of the inputs 1 to 8. Possible colors are Green, Red, Gray or Amber. Default for all inputs is Gray.
Inp1_Border ~ Inp8_Border	Here you can set the color of the Border of each input. Can be set to Gray, Green, Red, Amber or Off (no bars, just text) or set to follow the color of a left tally (Follow_tal_l1/l2) or a right tally (Follow_tal_r1/r2). By default it is set to Gray.
Inp1_UMDColor ~ Inp8_UMDColor	With UMDColor you can set the color of the UMD bars of each input. Can be set to Gray, Green, Red, Amber, Off (no bars, just text) or set to follow the color of the left tally (Follow_tal_l1/l2) or the right tally (Follow_tal_r1/r2). By default it is set to Gray.
Inp1_UMDText ~ Inp8_UMDText	The text filled out in this setting is shown when the option #Inp1_Area1 ~ #Inp8_Area3 is set to show Static UMD. The default value is Window 1 ~ Window 8.

Timecode

Setting	Description
Inp1to8-VITC-Ln	These settings lets you select in which line the VITC time is located in each corresponding input. Can be any line between 7 and 22. Default is line 17.

Embedder

The SynView multiview card is able to extract a stereo pair of audio per input. These 8 stereo pairs will then be combined to 16 again and these channels will embedded in the first SDI output.

Tally and Under-Monitor Display (UMD) Color Protocol

Setting	Description
CtrlMode	This setting defines the protocol used to select Tally and UMD: ACP menu — Setting selected through menu GPI — setting via GPI TSL — Uses the serial TSL v3.1 protocol for tally / UMD info TSLv5 — Uses the TSLv5 protocol (Please refer to "Appendix 1: Supported Protocols" on page 39) The TSL protocol will always work in 16 character mode.
TSL-Netw-Port	This sets the number of the port which the multiviewer will listen to for the TSLv5 commands.
TSLv5-Screen-A ~ TSLv5-Screen-B	TSLv5 has the possibility to use device and window addressing. This setting is the device addressing. For each card, the user will need to enter a different number. The PIPs on the screen will then be numbered automatically from 1 to 16.
CC_Channel	Here you can select the channel that provides the subtitles. Options are CC1 (default), CC2, T1 or T2.
Note_Ln1 ~ Note_Ln8	On the background of the multiviewer, you can select to display notes. The text entered here will be displayed as a yellow note which can have up to 8 lines of text.

Temperature

Setting	Description
Monitor-Temp	This setting will show the temperature in the temperature monitor status. Default the setting is set to Off.

5.3. Network

Setting	Description
IP_Conf0	With this setting you can either let the card obtain an IP address automatically via DHCP, or assign an IP address manually. By default this is set to DHCP.
mIP0	When IP_Conf0 is set to manual, you can enter the preferred IP address here. By default it is set to 0.0.0.0
mNM0	When IP_Conf0 is set to manual, with this setting you can set a Netmask. Default is 0.0.0.0
NetwPrefix0	With IP_Conf set to manual, this item lets you set a network mask prefix varying from 0 to 30 bit. The mNM0 network mask changes accordingly.
mGW0	With IP_Conf0 set to manual, this setting lets you set a Standard Gateway. Default is set to 0.0.0.0.
mPri_DNS	Primary Domain name server to be used for resolving hostnames. Default IP address is 0.0.0.0.
mSec_DNS	Secondary Domain name server to be used for resolving hostnames. Default IP address is 0.0.0.0.
NTPServer	With this string, you can set an NTP server name or IP address to which the system clock should then synchronize. The NTP connection should be made via the Ethernet connection on the back panel. The default site is pool.ntp.org.
Timezone	This setting allows for setting the timezone for the multiviewer. This is a text-based entry field. Please refer to the table in "Appendix 2: Timezones" to select the required timezone. By default, the multiviewer is set to Europe/Amsterdam.

GPI Functionality

In the ACPv1 release, we have limited GPI functionality. The functions are limited to addressing one tally per physical pin. The mapping is fixed between contacts and inputs, i.e. Contact_1 will address the tally functionality of PIP 1.

Expanded GPI functions are available in the ACPv2 release of this product.

If the tally is used with a protocol such as TSL, far more functions are possible. With GPI triggered tallies, the functionality is limited.

Usage: The user needs to assign a contact to the specific tallies and when the contact is closed, the tally is activated. The tally will remain activated for as long as this contact is closed and will deactivate when the contact is reopened.

Setting	Description
Contact_1 ~ Contact_8	This setting is used to select what is associated with the GPIs (general purpose inputs). Can be: Off, Tally_L1, Tally_R2, Tally_L1+R2, Border or UMD.

6. Use Cases and Advanced User Guide

Backgrounds

The SynView multiview system has also capabilities for displaying background graphics. Factory default, there will be an EVS background. For the user it is possible to put another picture on the board, which will be used as background. This picture will be scaled to the resolution set on the output.

The location of these logo's can be found on the first card of the multiview system. To access this, you need to connect to the card with FTP or WebDav. When the IP address of the 1G port is being accessed with one of the protocols mentioned, three folders are found. Background_A, Background_B and Fonts.

When a picture, with the .png format will be dropped into one of the background directories, the card automatically will use the picture for the one of the backgrounds.

Fonts

The SynView multiview system has also capabilities for displaying different fonts. Factory default, there will be an axon which is used. For the user it is possible to put another font on the board, which will be used as font for all text displayed.

The location of this font can be found on all cards of the multiview system. To access this, you need to connect to the card with FTP or WebDav. When the IP address of the 1G port is being accessed with one of the protocols mentioned, three folders are found. Background_A, Background_B and Fonts.

When a font, with the .ttf or .otf format will be dropped into the font directory, the card needs to be restarted to use this.

On-Screen Closed Caption Decoding

This section explains how to configure the multiview system to display closed captioning on screen.

On-Screen Closed Caption Decoding is supported across all current SynView multiviewer products, including the MGU200 - MGG200.

- CEA-708 is supported (limited character set, without extensions), processing only the encapsulated EIA-608 byte pairs.
- Text is displayed in white on a black background, with limited formatting options.

How to Activate On-Screen Closed Captions

1. Closed caption decoding is first enabled by selecting Closed Captions:

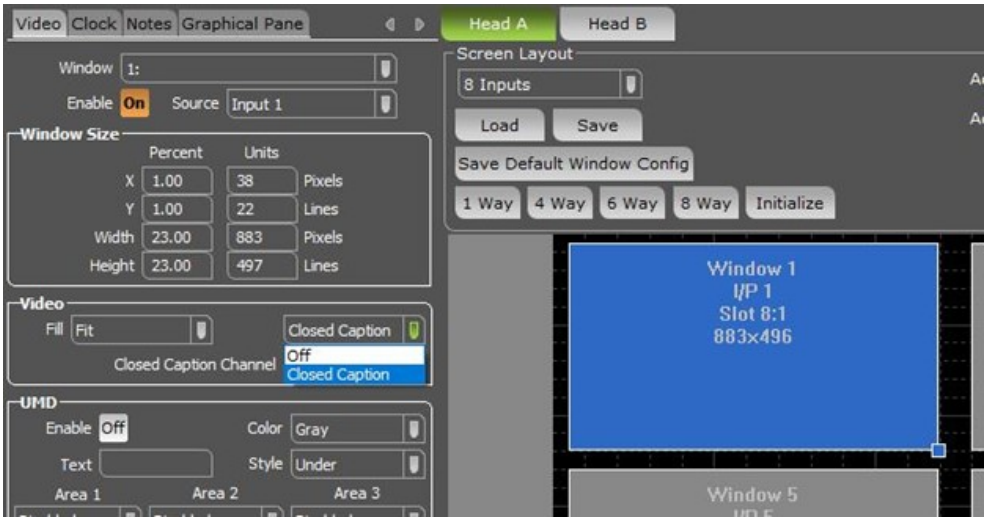

Figure 1. Closed Caption On/Off

2. Then select one of the Closed Caption Channel options (CC1, CC2, TXT1, TXT2) in the dropdown shown below:

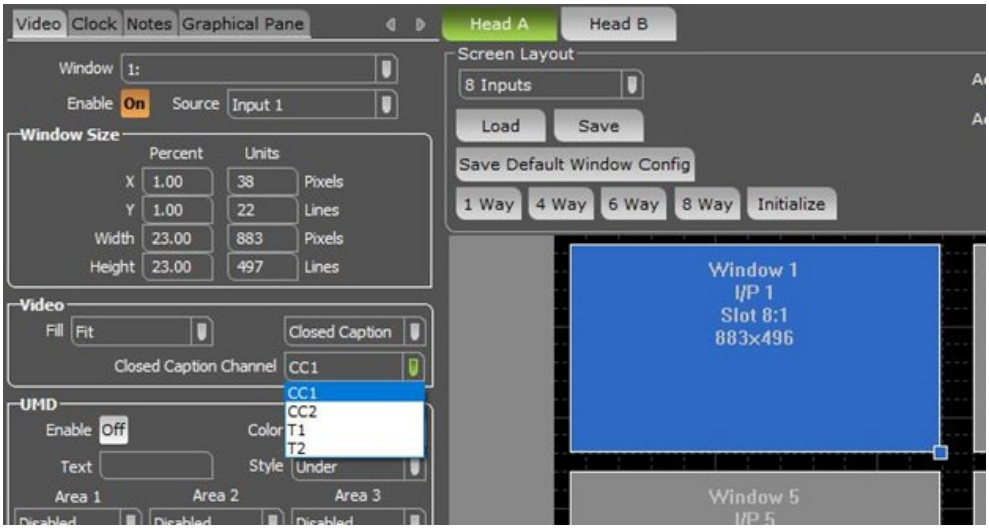

Figure 2. Closed Captioning Channel Selection

A closed captions detection status item is now available per physical input:

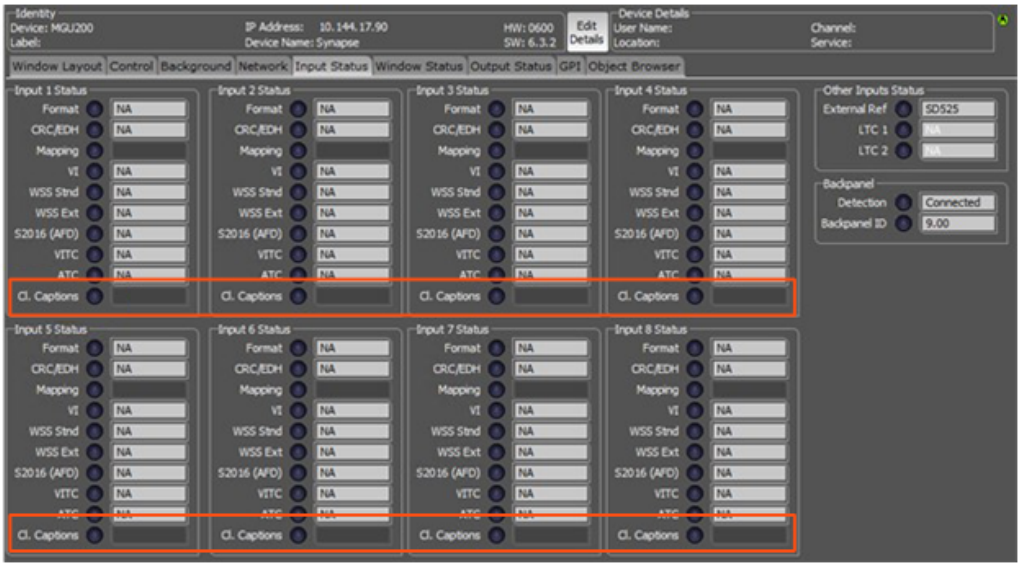

Figure 3. CC Decoding Status

CC data is processed and rendered as a transparent overlay on top of the video.

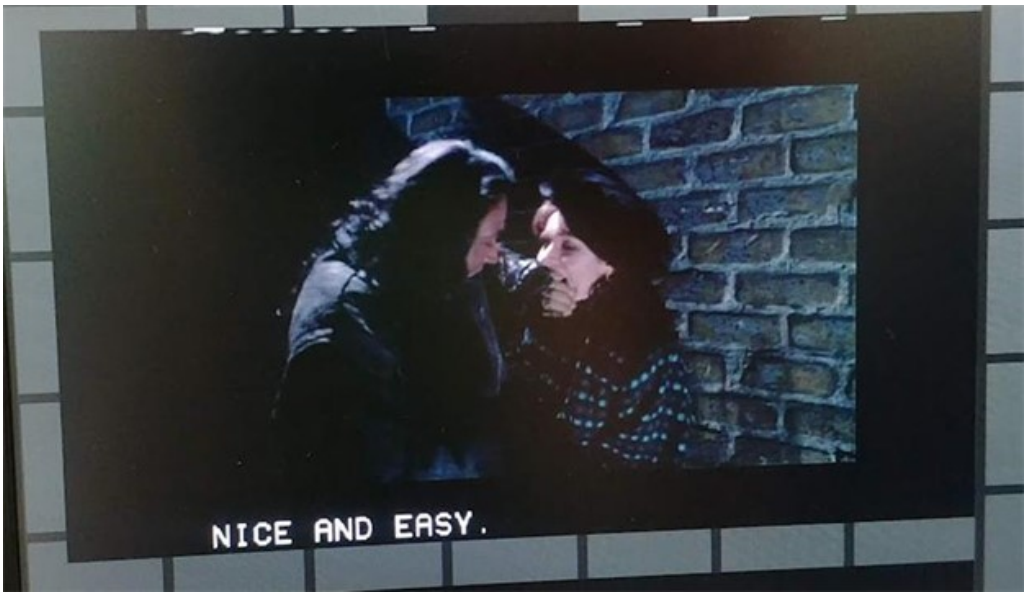

Figure 4. Rendered Result

7. Status Menu

7.1. Introduction

The Status menu provides information about the current status of each item listed below.

7.2. System Status

Ref-Format	This status item indicates the presence and format reference applied to the system. This is displayed as: • 1080p60 • 720p60 • 1080i60 • 1080p50 • 720p50 • 1080i50 • 1080p30 • 720p30 • 1035i60 • 1080p25 • 720p25 • 1080p24 • 720p24 • NA
PTP Status	
gPTP-Clock	The PTP-clock status will display if the card is locked to the PTP or not. If the card is Locked to a grandmaster PTP clock, it will indicate Slave to this clock. If there is no Master in a system, the first card which can act as Master will take over. In this case the card will announce Master. If the card cannot lock to a PTP system it indicates that the card is Not Locked.
RX Status	
Rx1-Status ~ Rx16 - Status	If the stream is received correctly, the receiver will de-capsulate the IP packets into SDI. When this is working, the corresponding Rx-Status will indicate Active. In all other cases, it will indicate Inactive.
sInp1 ~ sInp8	This status item indicates the presence and format of a valid signal in inputs 1-8. This is displayed as: • 1080p60 • 720p60 • 1080i60 • 1080p50 • 720p50 • 1080i50 • 1080p30 • 1080p25 • SD625 • 1080p24 • SD525 • NA

sInp1_Map ~ sInp8_Map	This indicates the mapping of the 3Gb/s input signal. Can be: • Level A • Level B-DS • NA • Level B-DL • Level B-DSSC • PsF
sInp1_VI ~ sInp8_VI	Displays the detected VI value foundin the inputs when they are SD. This is displayed as follows: • 4:3_0 • 4:3_1 • 4:3_2 • 4:3_3 • 4:3_4 • 4:3_5 • 4:3_6 • 4:3_7 • NA (no VI detected) • 16:9_0 • 16:9_1 • 16:9_2 • 16:9_3 • 16:9_4 • 16:9_5 • 16:9_6 • 16:9_7
sInp_WSS-Stnd ~ sInp8_WSS-Stnd	This status item displays the detected standard WSS value of the inputs when they are SD. This is displayed as follows: • 1_vid • 2_vid • 3_vid • 4_vid • 5_vid • 6_vid • 7_vid • 8_vid • 1_flm • 2_flm • 3_flm • 4_flm • 5_flm • 6_flm • 7_flm • 8_flm • NA (no standard WSS detected)
sInpA_WSS-Extd ~ sInp8_WSS-Extd	This item displays the detected extended WSS value of the inputs when they are SD. This is displayed as follows: • 4:3_0 • 4:3_1 • 4:3_2 • 4:3_3 • 4:3_4 • 4:3_5 • 4:3_6 • 4:3_7 • 16:9_0 • 16:9_1 • 16:9_2 • 16:9_3 • 16:9_4 • 16:9_5 • 16:9_6 • 16:9_7 • NA (no WSS extended detected)

sInp_s2016 ~ sInp8_s2016	This item displays the detected SMPTE 2016 (AFD) values of the corresponding input. This is displayed as follows: • AFD0 • AFD8 • AFD1 • AFD9 • AFD2 • AFD10 • AFD3 • AFD11 • AFD4 • AFD12 • AFD5 • AFD13 • AFD6 • AFD14 • AFD7 • AFD15 • NA (no S2016 detected)
sInp1_CC ~ sInp8_CC	This item indicates the closed caption standard detected on the corresponding input. Can be: • CEA-608 • CEA-708 • NA
sInp1_CRC_EDH ~ sInp8_CRC_EDH	This item indicates CRC and EDH errors on the corresponding input . Can be: • OK • Error • NA
VITC-Presence	Displays which inputs contain VITC data. This is displayed as ____ when none of the inputs contain VITC, 1234 if all inputs contain VITC and for instance _2_4 when inputs 2 and 4 contain VITC and inputs 1 and 3 do not.
ATC-Presence	Displays which inputs contain ATC data. This is displayed as ____ when none of the inputs contain ATC, 1234 if all inputs contain ATC and for instance _2_4 when inputs 2 and 4 contain ATC and input 1 and 3 don't.
LTC-Stat1 ~ LTC-Stat2	Indicates if there is an LTC input present on the backpanel. Indicated as OK or NA (not available).
sInp1_Tal_l1 ~ sInp16_Tal_l1	These items display the status of the tally on the far left of the input window. It can be Gray (off), Green, Red or Amber.
sInp1_Tal_l2 ~ sInp16_Tal_l2	These items display the status of the second tally from the left of the input window. It can be Gray (off), Green, Red or Amber.
sInp1_Tal_r1 ~ sInp16_Tal_r1	These items display the status of the tally on the far right of the input window. It can be Gray (off), Green, Red or Amber.
sInp1_Tal_r2 ~ sInp16_Tal_r2	These items display the status of the second tally from the right of the input window. It can be Gray (off), Green, Red or Amber.

sInp1_Border ~ sInp16_Border	These items display the status of the input's window border color. It can be Gray (off), Green, Red or Amber.
sInp1_UMDText ~ sInp16_UMDText	These items display the status of the input's window UMD text. Can be a string with a maximum length of 16 characters.
sInp1_UMDText2 ~ sInp16_UMDText2	These items display the status of the input's window UMD text. Can be a string with a maximum length of 16 characters.
sInp1_UMDText3 ~ sInp16_UMDText3	These items display the status of the input's window UMD text. Can be a string with a maximum length of 16 characters.
sInp1_UMDColor ~ sInp16_UMDColor	These items display the status of the input's window UMD color. It can be Gray (off), Green, Red or Amber.
Head_A_Chain_ID ~ Head_B_Chain_ID	This is the unique identifier of the daisy-chain. The same number should be specified on all the cards in a multi-card multiviewer setup.
Head_A_Chain_Num ~ Head_B_Chain_Num	This number indicates the position of the card in the chain. It is 0 for the first or for a single card. The number is incremented by 1 for each card in the chain, e.g. in a 5-card setup, the Daisy Chain number will be 0, 1, 2, 3, 4 for the 1st, 2nd, 3rd, 4th and 5th cards respectively.
Head_A_Lock ~ Head_B_Lock	This item shows whether the output is locked to the ref.
Daisy_A_in_Lock ~ Daisy_B_in_Lock	This item shows if the Daisy-chain receiver on the card can correctly lock on the incoming Daisy Chain information recieved from the previous card in its chain. For the first card in the chain, this value will show "Unlock" (as there is no previous card to receive the Daisy Chain info. from). All the other cards need to show "Locked".
Head_A_Wordlock ~ Head_B_Wordlock	This item indicates if the card has received a correct Wordlock from its predecessor in the chain. The value will be 0x00 for the first (or only) card and needs to be 0x0F for all subsequent cards in a multicard multiviewer setup.
Head_A_Daisy_Err ~ Head_B_Daisy_Err	This counter displays the number of errors owing to Daisy Chain data corruption. On a properly connected multiviewer setup, this value should be 0 or very close to 0. If this counter increases during normal operation, the black daisy chain cables should be checked to ensure that the connectors are locked in their sockets (it should not be possible to disconnect the cable without pushing its latch).

Head_A_Irq_Stat ~ Head_B_Irq_Stat	This status item is used for resolving background selection errors. Possible statuses are: ***Setting*** — ***Background Status*** Image set as background — Filename of the uploaded picture Card in daisy chain mode — Transparent Default background — Default Solid color background — Solid color
Head_A_Daisy_Val ~ Head_B_Daisy_Val	This value should be 0 for the system to function correctly.
Daisy-Ref-DelayA ~ Daisy-Ref-DelayB	The Daisy Chain Delay status object provides information about the introduced progression delay on the Daisy Chain between two adjacent cards in a multicard setup. The value itself is not very important, but typically it is expected that the values should remain more or less constant.
Contact-Status	Displays the currently closed GPI contacts.
Backpanel-Det	Indicates whether the backpanel has been detected. Possible statuses are Connected or Disconnected (default).
Backplane-ID	Indicates the ID number of the backpanel connected to the card.
CPU_Fan	Indicates the speed of the CPU fan. Can be between 0rpm and 32767rpm.
CPU_Env_Temp	This status will show the temperature of the CPU. This sensor is located next to the CPU. The temp range will be between 40° and 125°C.
FPGA_Core_Temp	Indicates the current FPGA core temperature. Can be between 40° and 125°C.
Power-Cons	This status will show the power consumption of the MV board. The power consumption range will be between 0W and 50W.

7.3. Net Status

Item	Description
Link0 ~ Link1	This item displays whether the ethernet connection is Disconnected, Unknown (not detected) or the 10Mb, 100Mb, 1Gb, 2.5Gb and 10Gb bandwidths.
IP_Addr0 ~ IP_Addr1	This item displays the status of the IP address. It can be manual, DHCP asking (default), DHCP Leased or DHCP Infin.
MAC0 ~ MAC2	This item displays the MAC address of the card.
IP0 ~ IP2	This item displays the current IP address of the card.
NM0 ~ NM2	This item displays the current Netmask of the card.
GW0	This item displays the current Standard Gateway of the card.

8. Events Menu

Introduction

An event is a special message that is generated on the card asynchronously. This means that it is not the response to a request to the card, but a spontaneous message.

What is the Goal of an Event?

The goal of events is to inform the environment about a changing condition on the card. A message may be broadcast to mark the change in status. The message is volatile and cannot be retrieved from the system after it has been broadcast. There are several means by which the message can be filtered.

The events reported by the MGU200-MGG200 card are as follows:

Menu Item	Description
Announcements	Announcements is not an event. This item is only used for switching the announcement of status changes on/off. 0=off, other =on
Input	Input can be selected between 0 .. 255. 0= no event, 1..255 is the priority setting.

This information is only needed when the GPI16 card is used or when software is implemented.

What Information is Available in an Event?

The message consists of the following items:

- A message string to show what has happened in text, for example: “INP_LOSS”, “REF_LOSS”, “INP_RETURN”.
- A tag that also shows what happens, but with a predefined number: e.g. 1 (= loss of input), 2 (= loss of reference), 129(= 1+128 = return of input). For a list of these predefined tags, please see the table below.
- A priority that marks the importance of an event. This value is defined by the user and can have any value between 1 and 255, or 0 when disabled.
- A slot number of the source of this event.

Message String

The message string is defined in the card and is therefore fixed. It may be used in controlling software like Synapse Set-up to show the event.

Tags

The tag is also defined in the card. The tag has a fixed meaning. When controlling or monitoring software has to make decisions based on events, it is easier to use the tag instead of interpreting a string. The first implementation is the tag-controlled switch in the GPI16.

In cases where the event marks a change to an error status (e.g. 1 for Loss of Input), the complement is marked by the tag increased by 128 (80hex), (e.g. 129 (81hex) for Return of Input).

The tags defined for the MGU200-MGG200 card are:

Event Menu Item	Tag		Description
Announcements	01_{hex}=Announcements on	81_{hex}=Announcements off	Announcement of report and control values
Input	01_{hex}=INP_LOSS	81_{hex}=INP_RETURN	Primary input lost or returned

Priority

The priority is a user-defined value. The higher the priority of the alarm, the higher this value will be. Setting the priority to Zero disables the announcement of this alarm. Alarms with priorities equal to or higher than the Error Threshold setting of the RRC will cause the error LED on the Synapse rack front panel to light up.

Card Address

Together with the message string or the tag, the slot number or address of the card is relevant to be able to assign the event to a certain card.

9. LED Indication

Indicator	Description
Error LED	The error LED indicates an error if the internal logic of the card is not configured correctly or has a hardware failure.
Input1 LED ~ Input8 LED	These LEDs indicate the presence of a valid SDI video signal on inputs 1 through 8.
Reference LED	Indicates the presence of a valid reference signal on the selected reference input connector (ref-1 or ref-2).
Connection LED	This LED lights up after the card has initialized. The LED lights up for 0.5 seconds every time a connection is made to the card.
ANC LED	This LED indicates the presence of ancillary data (e.g. ATC timecode)

10. Block Schematic

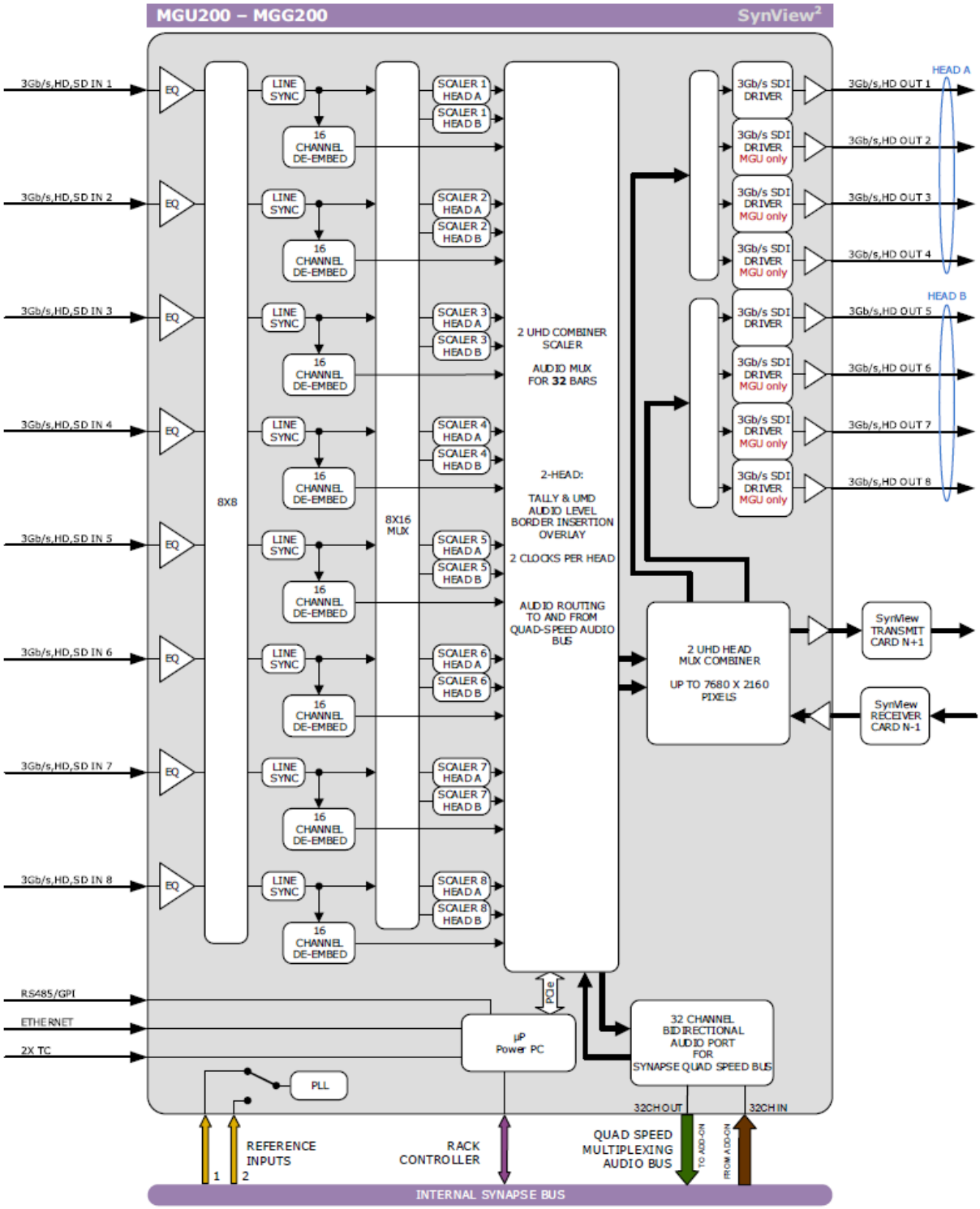

11. Connector Panels

The MGG200 - MGU200 can be used with the BPH47 connector panel.

BPH47

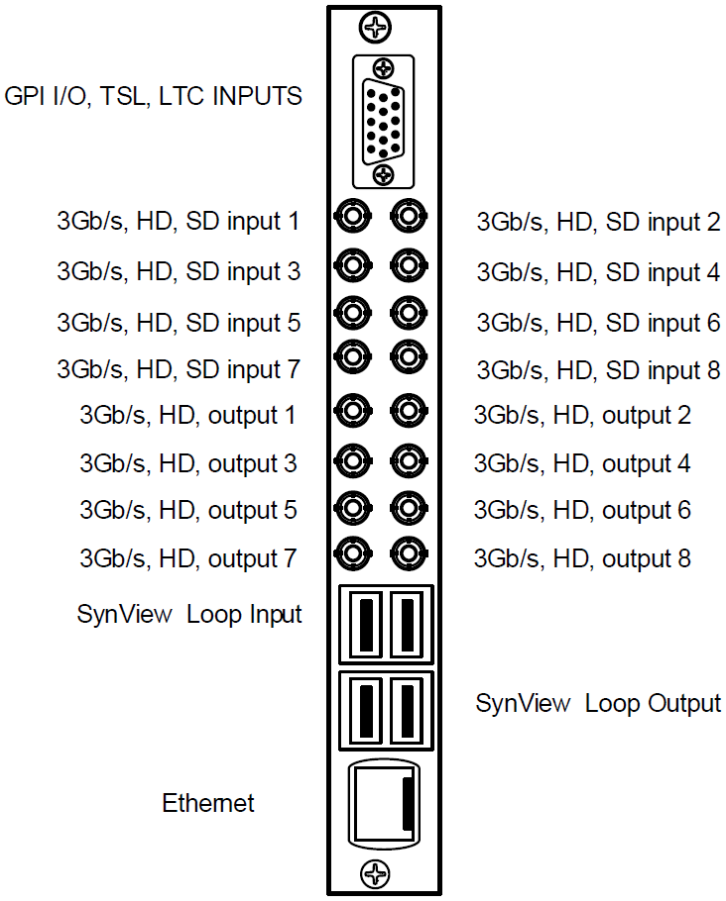

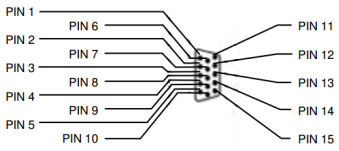

Pin	Function	Pin	Function
PIN 1	Metadata RX B	PIN 9	GPIO 4
PIN 2	Metadata TX A	PIN 10	GPIO 7
PIN 3	GPIO 1	PIN 11	Metadata TX B
PIN 4	GPIO 3	PIN 12	TC 2
PIN 5	GPIO 2	PIN 13	GPIO 5
PIN 6	Metadata RX A	PIN 14	GPIO 8
PIN 7	GND	PIN 15	GPIO 6
PIN 8	TC 1		

GPIs work in a latching mode.

Appendices

Appendix 1: Supported Protocols

ASCII

Electrical

RS232 (max 30 meters)
9.6 kbaud
8-bit
2 stop bits
No parity, X-on/X-off

Commands

Loading the display: ZDaanabcdefgh<cr>

ZD	command identification “display set”
aa	UMD address in HEX form as selected at the UMD
n	display number (1..n)
abcdefgh	characters for the display
<cr>	carriage return (end and sync character)

Setting the Tally LEDs : ZT aantt<cr>

ZT	command identification “Tally set”
aa	UMD address in HEX form as selected at the UMD
n	display number (1..n)
tt	TALLY led LEFT,RIGHT (0=off,1=on)
<cr>	carriage return (end and sync character)

Adjusting the brightness: ZBaanv<cr>

ZB	command identification “brightness set”
aa	UMD address in HEX form as selected at the UMD
n	display number (1..n)
v	“+” = lighter, “-“ = darker
<cr>	carriage return (end and sync character)

Adjusting Display/Tally Color: ZLaallcc<cr>

ZL	command identification “display set”
aa	UMD address in HEX form as selected at the UMD
ll	display number or tally led –number from left to right
00	1st Display
1	2nd Display
80	1st Tally LED
81	2nd Tally LED
82	3rd Tally LED
83	4th Tally LED
cc	Color-Code
00	Black
11	Green
21	Red
31	Amber
<cr>	carriage return (end and sync character)

Adjusting the display and tally brightness ZSaadbb<cr>

ZS	command identification “display and tally brightness”
aa	UMD address in HEX form as selected at the UMD
d	display
bb	Brightness (00..64 HEX notation)
<cr>	carriage return (end and sync character)

TSLv3.1

This protocol sets out to define the method of communication between a TSL controller and peripheral devices on a multi-drop device bus. The protocol described is for one way communication only. It details physical layer, link layer and message structure.

Electrical

RS 422/ RS 485
8 bit data
1 stop
even parity
38k4 baud

Dynamic UMD Protocol

HEADER / CONTROL BYTE / DISPLAY DATA

Header (1 byte):

Display address (0-126) + 80 hex control byte and display data will be sent

Control (1 byte):

bit 0	tally 1	1=on, 0=off
bit 1	tally 2	1=on, 0=off
bit 2	tally 3	1=on, 0=off
bit 3	tally 4	1=on, 0=off
bits 4-5: brightness data		
bit 4=0, bit 5=0	0 brightness	
bit 4=0, bit 5=1	1/7 brightness	
bit 4=1, bit 5=0	1/2 brightness	
bit 4=1, bit 5=1	full brightness	
bit 6	reserved (clear to 0)	
bit 7	cleared to 0	

Display Data (16bytes):

16 displayable ASCII characters in the range 20 hex to 7E hex. All 16 characters must be sent.

Single Dynamic Displays

For 8 character displays only the first 8 characters of the display data are used, the remaining 8 are needed just for padding. Only tallies 1&2 are use for single displays.

Dual Dynamic Displays

Dual 8 character displays are treated as a single display of 16 characters, the first 8 characters for the left-hand side and the second 8 characters for the right-hand side. Tallies 1&2 are for the left display and tallies 3&4 for the right display.

Triple/Quad Dynamic Displays

These units take two addresses.

Address 1 for display 1, tallies 1 & 2
Address 1 for display 2, tallies 3 & 4
Address 2 for display 3, tallies 5 & 6
Address 2 for display 4, tallies 7 & 8

TSLv5

This protocol is a new 16-bit UMD protocol, with no reverse compatibility to previous TSL UMD protocols. The primary points distinguishing this protocol from previous versions are as follows:

- Display addressing up to 65,535 per screen
- ASCII or Unicode character sets
- Variable length mnemonics
- IP based packet communication, with optional wrapper for stream based comms
- Multiple display updates per packet

Physical Layer

Packets are sent via UDP. Maximum packet length is 2048 bytes. Optionally, the protocol can operate over TCP/IP, or any other byte stream interface, with the following wrapper scheme:

DLE is defined as 0xFE
STX is defined as 0x02

Packet start is delimited by the sequence DLE/STX. Any occurrence of the DLE character in the packet is byte stuffed to DLE/DLE. Any byte count fields in the packet are not affected by the byte stuffing.

Message Format

16 bit values are sent as little-endian, i.e. LSB/MSB.

The packet is defined as follows:

PBC / VER / FLAGS / SCREEN / (<DMSG> (/ <DMSG>)...) or (SCONTROL)

PBC (16 bit):

Total byte count of following packet.

VER (8 bit):

Minor version number (e.g. V5.00, VER = 0). This byte can be used as versioning control for the following definitions. Whilst any future changes to this protocol will aim to be backward compatible, this is not guaranteed.

FLAGS (8bit):

Defined as follows:

Bit 0	Clear for ASCII based strings in packet, set for Unicode UTF-16LE
Bit 1	If set, data after SCREEN is screen control data (SCONTROL) – otherwise it is display message data (DMSG)
Bits 2-7	Reserved (clear to 0)

SCREEN (16 bit):

Primary index for use where each screen entity would have display indices (defined below) starting from 0.

Index 0xFFFF is reserved as a “Broadcast” to all screens.

If not used, set to 0.

Display Message (<DMSG>) Definition

This message definition is sent per display, and there can be several in a packet (up to max packet length). Constructed as follows:

INDEX / CONTROL / (LENGTH / TEXT) or (CONTROL DATA)

INDEX (16 bit):

The 0 based address of the display, up to 65534 (0xFFFE).

Address 0xFFFF is reserved as a “Broadcast” address to all

displays.

CONTROL (16 bit):

Display control and tally data as follows:

Bit 0-1: RH Tally Lamp state

Bit 2-3: Text Tally state

Bit 4-5: LH Tally Lamp state

Bit 6-7: Brightness value (range 0-3)

Bit 8-14: Reserved (clear to 0)

Bit 15: Control Data: following data to be interpreted as Control data rather than Display data when set to 1.

Bit 2 Tally values are:

0	OFF
1	RED
2	GREEN
3	AMBER

Display Data: (CONTROL bit 15 is cleared to 0)

LENGTH (16 bit)	Byte count of following text
TEXT	UMD text, format defined by FLAGS byte

Control Data: (CONTROL bit 15 is set to 1)

Not defined in this version of the protocol.

Screen Control (SCONTROL) Definition (FLAGS bit 1 set to 1)

Not defined in this version of the protocol.

Appendix 2: Timezones

Africa

Africa/Abidjan
Africa/Accra
Africa/Addis_Ababa
Africa/Algiers
Africa/Asmara
Africa/Asmera
Africa/Bamako
Africa/Bangui
Africa/Banjul
Africa/Bissau
Africa/Blantyre
Africa/Brazzaville
Africa/Bujumbura
Africa/Casablanca
Africa/Ceuta
Africa/Conakry
Africa/Dakar
Africa/Dar_es_Salaam
Africa/Djibouti
Africa/Douala
Africa/El_Aaiun
Africa/Freetown
Africa/Gaborone
Africa/Harare
Africa/Johannesburg
Africa/Juba
Africa/Kampala
Africa/Khartoum
Africa/Kigali
Africa/Kinshasa
Africa/Lagos
Africa/Libreville
Africa/Lome
Africa/Luanda
Africa/Lubumbashi
Africa/Lusaka
Africa/Malabo
Africa/Maputo
Africa/Maseru
Africa/Mbabane
Africa/Mogadishu
Africa/Monrovia
Africa/Nairobi
Africa/Ndjamena
Africa/Niamey
Africa/Nouakchott
Africa/Ouagadougou
Africa/Porto-Novo
Africa/Sao_Tome
Africa/Timbuktu
Africa/Tripoli
Africa/Tunis
Africa/Windhoek

America

America/Adak
America/Anguilla
America/Antigua
America/Araguaina
America/Argentina
America/Argentina/Buenos_Aires
America/Argentina/Catamarca
America/Argentina/ComodoroRivadavia
America/Argentina/Cordoba
America/Argentina/Jujuy
America/Argentina/La_Rioja
America/Argentina/Mendoza
America/Argentina/Rio_Gallegos
America/Argentina/Salta
America/Argentina/San_Juan
America/Argentina/San_Luis
America/Argentina/Tucuman
America/Argentina/Ushuaia
America/Aruba
America/Asuncion
America/Atikokan
America/Atka
America/Bahia
America/Bahia_Banderas
America/Barbados
America/Belem
America/Belize
America/Blanc-Sablon
America/Boa_Vista
America/Bogota
America/Boise
America/Buenos_Aires
America/Cambridge_Bay
America/Campo_Grande
America/Cancun
America/Catamarca
America/Cayenne
America/Cayman
America/Chihuahua
America/Coral_Harbour
America/Cordoba
America/Costa_Rica
America/Creston
America/Cuiaba
America/Curacao
America/Danmarkshavn
America/Dawson
America/Fort_Wayne
America/Fortaleza
America/Glace_Bay
America/Godthab
America/Goose_Bay
America/Grand_Turk
America/Grenada
America/Guadeloupe
America/Guatemala
America/Guayaquil
America/Guyana
America/Halifax
America/Havana
America/Hermosillo
America/Indiana
America/Indiana/Indianapolis
America/Indiana/Knox
America/Indiana/Marengo
America/Indiana/Petersburg
America/Indiana/Tell_City
America/Indiana/Vevay
America/Indiana/Vincennes
America/Indiana/Winamac
America/Indianapolis
America/Inuvik
America/Iqaluit
America/Jamaica
America/Jujuy
America/Juneau
America/Kentucky
America/Kentucky/Louisville
America/Kentucky/Monticello
America/Knox_IN
America/Kralendijk
America/La_Paz
America/Lima
America/Louisville
America/Lower_Princes
America/Maceio
America/Managua
America/Manaus
America/Marigot
America/Martinique
America/Matamoros
America/Mazatlan
America/Mendoza
America/Menominee
America/Montserrat
America/Nassau
America/Nipigon
America/Nome
America/Noronha
America/North_Dakota
America/North_Dakota/Beulah
America/North_Dakota/Center
America/North_Dakota/New_Salem
America/Ojinaga
America/Panama
America/Pangnirtung
America/Paramaribo
America/Phoenix
America/Port-au-Prince
America/Port_of_Spain
America/Porto_Acre
America/Porto_Velho
America/Puerto_Rico
America/Punta_Arenas
America/Rainy_River
America/Rankin_Inlet
America/Recife
America/Regina
America/Resolute
America/Rio_Branco
America/Rosario
America/Santa_Isabel
America/Santarem
America/Santiago
America/Santo_Domingo
America/Scoresbysund
America/Shiprock
America/Sitka
America/St_Barthelemy
America/St_Johns
America/St_Kitts
America/St_Lucia
America/St_Thomas
America/St_Vincent
America/Swift_Current
America/Tegucigalpa
America/Thule
America/Thunder_Bay
America/Tijuana
America/Toronto
America/Tortola

America/Dawson_Creek
America/Detroit
America/Dominica
America/Edmonton
America/Eirunepe
America/El_Salvador
America/Ensenada
America/Fort_Nelson
America/Merida
America/Metlakatla
America/Mexico_City
America/Miquelon
America/Moncton
America/Monterrey
America/Montevideo
America/Montreal
America/Vancouver
America/Virgin
America/Whitehorse
America/Winnipeg
America/Yakutat
America/Yellowknife

Antarctica

Antarctica/Casey
Antarctica/Davis
Antarctica/DumontDUrville
Antarctica/Macquarie
Antarctica/Mawson
Antarctica/McMurdo
Antarctica/Palmer
Antarctica/Rothera
Antarctica/South_Pole
Antarctica/Syowa
Antarctica/Troll
Antarctica/Vostok

Arctic

Arctic/Longyearbyen

Asia

Asia/Aden
Asia/Almaty
Asia/Amman
Asia/Anadyr
Asia/Aqtau
Asia/Aqtobe
Asia/Ashgabat
Asia/Ashkhabad
Asia/Atyrau
Asia/Baghdad
Asia/Bahrain
Asia/Baku
Asia/Bangkok
Asia/Barnaul
Asia/Beirut
Asia/Bishkek
Asia/Brunei
Asia/Calcutta
Asia/Chita
Asia/Choibalsan
Asia/Chongqing
Asia/Chungking
Asia/Colombo
Asia/Dacca
Asia/Damascus
Asia/Dili
Asia/Dushanbe
Asia/Famagusta
Asia/Gaza
Asia/Harbin
Asia/Hebron
Asia/Ho_Chi_Minh
Asia/Hovd
Asia/Irkutsk
Asia/Istanbul
Asia/Jakarta
Asia/Jayapura
Asia/Jerusalem
Asia/Kabul
Asia/Kamchatka
Asia/Kashgar
Asia/Kathmandu
Asia/Katmandu
Asia/Khandyga
Asia/Kolkata
Asia/Krasnoyarsk
Asia/Kuala_Lumpur
Asia/Kuching
Asia/Kuwait
Asia/Macao
Asia/Macau
Asia/Magadan
Asia/Makassar
Asia/Manila
Asia/Muscat
Asia/Nicosia
Asia/Novokuznetsk
Asia/Novosibirsk
Asia/Omsk
Asia/Oral
Asia/Phnom_Penh
Asia/Pontianak
Asia/Pyongyang
Asia/Qatar
Asia/Qyzylorda
Asia/Rangoon
Asia/Riyadh
Asia/Saigon
Asia/Sakhalin
Asia/Samarkand
Asia/Seoul
Asia/Shanghai
Asia/Singapore
Asia/Srednekolymsk
Asia/Taipei
Asia/Tashkent
Asia/Tbilisi
Asia/Tehran
Asia/Tel_Aviv
Asia/Thimbu
Asia/Thimphu
Asia/Tomsk
Asia/Ujung_Pandang
Asia/Ulaanbaatar
Asia/Ulan_Bator
Asia/Urumqi
Asia/Ust-Nera
Asia/Vientiane
Asia/Vladivostok
Asia/Yakutsk
Asia/Yangon
Asia/Yekaterinburg
Asia/Yerevan

Atlantic

Atlantic/Azores
Atlantic/Bermuda
Atlantic/Canary
Atlantic/Cape_Verde
Atlantic/Faeroe
Atlantic/Faroe
Atlantic/Jan_Mayen
Atlantic/Madeira
Atlantic/Reykjavik
Atlantic/South_Georgia
Atlantic/St_Helena
Atlantic/Stanley

Australia

Australia/ACT
Australia/Broken_Hill
Australia/Canberra
Australia/Currie
Australia/Eucla
Australia/Hobart
Australia/LHI
Australia/Lindeman
Australia/Lord_Howe
Australia/Melbourne
Australia/NSW
Australia/North
Australia/Perth
Australia/Queensland
Australia/South
Australia/Tasmania
Australia/Victoria
Australia/West
Australia/Yancowinna

Brazil

Brazil/Acre
Brazil/DeNoronha
Brazil/East
Brazil/West

Canada

Canada/Atlantic
Canada/Central
Canada/East-Saskatchewan
Canada/Eastern
Canada/Mountain
Canada/Newfoundland
Canada/Pacific
Canada/Saskatchewan
Canada/Yukon

Chile

Chile/Continental
Chile/EasterIsland

Europe

Europe/Amsterdam
Europe/Andorra
Europe/Astrakhan
Europe/Athens
Europe/Belfast
Europe/Belgrade
Europe/Berlin
Europe/Bratislava
Europe/Brussels
Europe/Bucharest
Europe/Budapest
Europe/Busingen
Europe/Chisinau
Europe/Copenhagen
Europe/Dublin
Europe/Gibraltar
Europe/Guernsey
Europe/Helsinki
Europe/Isle_of_Man
Europe/Istanbul
Europe/Jersey
Europe/Kaliningrad
Europe/Kiev
Europe/Kirov
Europe/Lisbon
Europe/Ljubljana
Europe/Luxembourg
Europe/Madrid
Europe/Malta
Europe/Mariehamn
Europe/Minsk
Europe/Monaco
Europe/Nicosia
Europe/Oslo
Europe/Podgorica
Europe/Prague
Europe/Riga
Europe/Rome
Europe/Samara
Europe/San_Marino
Europe/Sarajevo
Europe/Saratov
Europe/Simferopol
Europe/Skopje
Europe/Sofia
Europe/Stockholm
Europe/Tallinn
Europe/Tirane
Europe/Tiraspol
Europe/Ulyanovsk
Europe/Uzhgorod
Europe/Vaduz
Europe/Vatican
Europe/Vienna
Europe/Vilnius
Europe/Volgograd
Europe/Warsaw
Europe/Zagreb
Europe/Zaporozhye
Europe/Zurich

Indian

Indian/Antananarivo
Indian/Chagos
Indian/Christmas
Indian/Cocos
Indian/Comoro
Indian/Kerguelen
Indian/Mahe
Indian/Maldives
Indian/Mauritius
Indian/Mayotte
Indian/Reunion

Mexico

Mexico/BajaNorte
Mexico/BajaSur
Mexico/General

Pacific

Pacific/Apia
Pacific/Auckland
Pacific/Bougainville
Pacific/Chatham
Pacific/Chuuk
Pacific/Easter
Pacific/Efate
Pacific/Enderbury
Pacific/Fakaofo
Pacific/Fiji
Pacific/Funafuti
Pacific/Galapagos
Pacific/Gambier
Pacific/Guadalcanal
Pacific/Guam
Pacific/Johnston
Pacific/Kiritimati
Pacific/Kosrae
Pacific/Kwajalein
Pacific/Majuro
Pacific/Marquesas
Pacific/Midway
Pacific/Nauru
Pacific/Niue
Pacific/Norfolk
Pacific/Pago_Pago
Pacific/Palau
Pacific/Pitcairn
Pacific/Pohnpei
Pacific/Ponape
Pacific/Port_Moresby
Pacific/Rarotonga
Pacific/Saipan
Pacific/Samoa
Pacific/Tahiti
Pacific/Tarawa
Pacific/Tongatapu
Pacific/Truk
Pacific/Wake
Pacific/Wallis
Pacific/Yap

US

US/Alaska
US/Aleutian
US/Arizona
US/Central
US/East-Indiana
US/Eastern
US/Hawaii
US/Indiana-Starke
US/Michigan
US/Mountain
US/Pacific
US/Samoa

GNU Public License

Open-Source Software

This product contains open-source software licensed under the GNU Public License (GPL). A copy of the GNU Public License can be obtained from https://www.gnu.org/licenses/old-licenses/gpl-2.0.html. Under this license, you are eligible to receive a copy of the source code of this software, including any changes.

EVS Broadcast Equipment SA shall provide the source code on request either through physical distribution or electronic communication. For physical distribution you may be charged a fee that covers distribution costs. This offer is valid up to three years after date of purchase. Please direct your request to the support department of EVS Broadcast Equipment SA.

EVS Broadcast Equipment SA supports open-source software by participating in the development of open-source projects or submitting improvements to these projects. For more information, please visit https://mi-sftp.evs.com.

→ evs.com